Chapter 14

Design of Structures with Seismic Isolation

Ronald L Mayes, Ph.D.
Consulting Engineer, Berkeley, California

Farzad Naeim, Ph.D., S.E.
Vice President and Director of Research and Development, John A. Martin and Associates, Inc., Los Angeles, California

..

Key words: Base Isolation, Damage Control, Design Examples, Damping, Earthquake Engineering, Energy Dissipation, Feasibility of Isolation, Friction Devices, High-Damping rubber bearings, IBC-2000, Lead-Rubber Bearings, New Construction, Preliminary Design, Response Spectrum Analysis, Seismic Isolation, Seismic Rehabilitation, Static Analysis, Time-History Analysis.

Abstract: This chapter surveys the principles, benefits, and the feasibility of seismic isolation. The basic principles of seismic isolation are introduced first. Contrary to a perception held by many engineers, neither the concept of seismic isolation is new nor its application is necessarily complex. What is new is the availability of relatively new materials and devices worked to perfection over the last two decades and advances in computational techniques now commonly in use by practicing engineers. Force-deflection characteristics ot commonly used isolation devices are introduced next followed by guidelines for evaluation of the feasibility of seismic isolation as an alternative for a given project. The differences in approach to new construction and rehabilitation of existing structures are highlighted. The building code provisions for seismic isolation are covered next. The very recently released year 2000 edition of the International Building Code (IBC-2000) takes a much more simple approach to seismic isolation than did its direct predecessor, the 1997 edition of the Uniform Building Code (UBC-97). This is true even though the theory and objectives implemented in both of these codes are the same. The simplification is largely due to incorporation of spectral hazard maps in IBC-2000. A very practical side-effect of this incorporation is elimination of near-fault factors from the design process simply because now they are explicitly contained in the map. In many cases, design according to the new IBC-200 requirements will result in smaller displacement and force demands on the isolation system and the structure above the isolation plane. This in terms mean that seismic isolation can be implemented much more economically than it was possible under UBC-97. The IBC-2000 design provisions for seismic isolation are discussed in detail. A simple preliminary design procedure is provided to aid engineers in initial sizing of the isolation devices. Several examples are provided to illustrate the practical application of the material covered in this chapter.

14.1 INTRODUCTION

Because of today's concern for liability, engineering innovations must be exhaustively tested and analytically proven to a degree unknown in the past. Early engineers were respected for their ability to design from first principles and produce designs that were conceptually right even though analytical or laboratory methods did not exist that would remove all doubt. For the most part, the great early engineers removed doubt by force of their personality and confidence. They took risks that would be unthinkable today.

The field of seismic design is, as perhaps benefits a subject directly concerned with both life safety and uncertainty, cautious and slow to innovate. In practice, improved seismic design does not represent a market opportunity because seismic safety is generally taken for granted. Like other code-dominated issues, and like airplane safety, seismic safety has never been much of a selling point. Money diverted to improve seismic resistance is often seen as a detraction from more visible and enjoyable attributes.

Improvements in seismic safety, since about the time of the San Francisco earthquake of 1906, have been due primarily to acceptance of ever-increasing force levels to which buildings must be designed. Innovation has been confirmed to the development and acceptance of economical structural systems that perform reasonably well, accommodate architectural demands such as open exteriors and the absence of interior walls, and enable materials such as steel and reinforced concrete to compete in the marketplace on near-equal terms.

The vocabulary of seismic design is limited. The choices for lateral resistance lie among shear walls, braced frames, and moment-resistant frames. Over the years, these have been refined and their details developed, and methods of analysis and modeling have improved and reduced uncertainty. But the basic approach has not changed: construct a ductile and/or strong building and attach it securely to the ground. This approach of arm wrestling with nature is neither clever nor subtle, and it involves considerable compromise.

Although codes have mandated steadily increasing force levels, in a severe earthquake a building, if it were to remain elastic, would still encounter forces several times above its designed capacity. This situation is quite different from that for vertical forces, in which safety factors insure that actual forces will not exceed 50% of designed capacity unless a serious mistake has been made. For vertical forces, this is easy to do. But to achieve similar performance for seismic forces, the structure would be unacceptably expensive and its architectural impact would be extreme. This discrepancy between seismic demand and capacity is traditionally accommodated by reserve capacity, which includes uncalculated additional strength in the structure and often the contribution of portions and exterior cladding to the strength and stiffness of the building. In addition, the ability of materials such as steel to dissipate energy by permanent deformation—which is called ductility—greatly reduces the likelihood of total collapse.

Modern buildings contain extremely sensitive and costly equipment that have become vital in business, commerce, education and health care. Electronically kept records are essential to the proper functioning of our society. These building contents frequently are more costly and valuable than the buildings themselves. Furthermore, hospitals, communication and emergency centres, and police and fire stations must be operational when needed most: immediately after an earthquake.

Conventional construction can cause very high floor accelerations in stiff buildings and large interstory drifts in flexible structures. These two factors cause difficulties in insuring the safety of the building components and contents (Figure 14-1).

In the past decade, an alternative to the brute-force to nature has finally reached the stage of more widespread application. This approach is obvious and easily explainable at

the cocktail-party level: why not detach the building from the ground in such a way that the earthquake motions are not transmitted up through the building, or are at least greatly reduced? This conceptually simple idea has required much research to make it feasible, and only with modern computerized analysis has become possible. Application has depended on very sophisticated materials research into both natural and composite materials in order to provide the necessary performance.

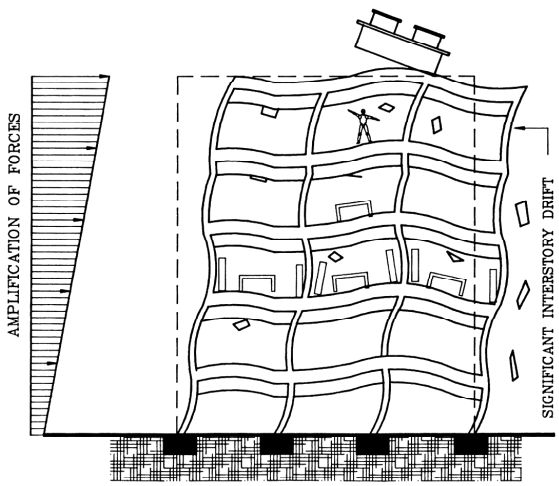

Figure 14-*1.* Conventional Structure

This new concept, now generally termed seismic isolation, meets all the criteria for a classic modern technological innovation. Imaginative advances in conceptual thinking were necessary, as were materials new to the industry, and ideas have developed simultaneously on a worldwide basis. But the method threatens conventional and established design procedures, so the road to seismic-isolation innovation is paved with argument, head shaking, and bureaucratic caution—all, to some extent, well-intentioned and necessary, given our litigious society.

Mounting buildings on an isolation system will prevent most of the horizontal movement of the ground from being transmitted to the buildings. This results in a significant reduction in floor accelerations and interstory drifts, thereby providing protection to the building contents and components (Figure 14-2).

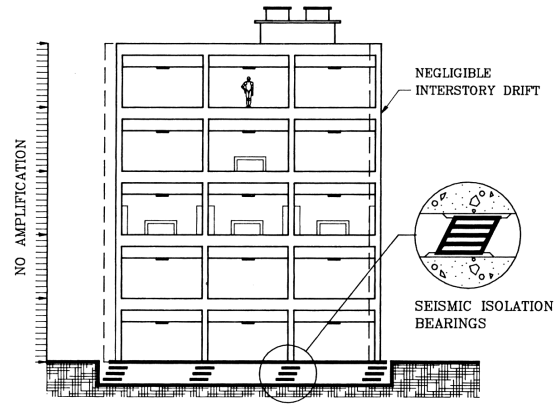

Figure 14-*2.* Base Isolated Structure

The principle of seismic isolation is to introduce flexibility at the base of a structure in the horizontal plane, while at the same time introducing damping elements to restrict the amplitude of the motion caused by the earthquake. The concept of isolating structures from the damaging effects of earthquakes is not new. The first patent for a seismic isolation scheme was taken out in 1909[14-1] and since that time several proposals with similar objectives have been made (see References 14-2 to 14-8). Nevertheless, until the last two decades, few structures have been designed and built using these principles.

However, new impetus was given to the concept of seismic isolation by the successful development of mechanical-energy dissipaters and elastomers with high damping properties (see References 14-8 to 14-15). Mechanical-energy dissipaters, when used in combination with a flexible isolation device, can control the response of the structure by limiting displacements and forces, thereby significantly improving seismic performance. The seismic energy is dissipated in components specifically designed for that purpose, relieving structural elements, such as beams and columns, from energy-dissipation roles (and thus damage). There are over two hundred civil engineering structures that have now been constructed using

the principles of seismic isolation. Kelly[14-6], Buckle and Mayes[14-7] and Naeim and Kelly[14-8] provide an excellent history of world overview. Other references containing overview material are given in references 14-25 and 14-41.

The advantages of seismic isolation include the ability to eliminate or very significantly reduce structural and nonstructural damage, to enhance the safety of the building contents and architectural facades, and to reduce seismic design forces. These potential benefits are greatest for stiff structures fixed rigidly to the ground, such as low- and medium-rise buildings, nuclear power plants, bridges, and many types of equipment. Some tectonic and soil-foundation conditions may, however, preclude the use of seismic isolation.

14.1.1 An Idea Whose Time Has Come

The elastomeric bearing and the mechanical damper are fundamental components in many seismic isolation schemes. But it is not just the invention of the elastomeric bearing and the energy dissipater which has made seismic isolation a practical reality. Three other parallel, but independent, developments have also contributed to its success.

The first of these was the development of reliable software for the computer analysis of structures so as to predict their performance and determine design parameters. Work has been in progress for more than 25 years on the software for inelastic analysis of structural systems, and there are many available programs. Application to seismically isolated structures is straightforward, and correlation studies with model tests show many software systems to be soundly based.

The second development was the use of shaking tables which are able to simulate the effects of real recorded earthquake ground motions on different types of structures. The results of shaking-table tests over the last 20 years (see Reference 14-16 to 14-22 and 14-31 to 14-40) have provided another mechanism to enhance confidence in the way buildings respond during real earthquakes. In addition, the results provide an opportunity to validate computer modeling techniques which are then used on full-size structures.

A third important development is in the skill of the engineering seismologist in estimating ground motions at a particular site. Recent advances in seismology have given more confidence in site-specific ground motions which take into account fault distances, local and global geology, and return periods. These design motions are basic input to the computer modeling of seismically isolated systems and are a vital step in the estimation of system performance.

In summary then, five recent developments are together responsible for elevating seismic isolation from fantasy to practical reality:

The design and manufacture of high-quality elastomeric (rubber) pads, frequently called bearings, that are used to support the weight of the structure but at the same time protect it from earthquake-induced forces.

The design and manufacture of mechanical-energy dissipaters (absorbers) and high-damping elastomers that are used to reduce the movement across the bearings to practical and acceptable levels and to resist wind loads.

The development and acceptance of computer software for the analysis of seismically isolated structures which includes nonlinear material properties and the time-varying nature of the earthquake loads.

The ability to perform shaking-table tests using real recorded earthquake ground motions to evaluate the performance of structures and provide results to validate computer modeling techniques.

The development and acceptance of procedures for estimating site-specific earthquake ground motions for different return periods.

14.2 CONSIDERATIONS FOR SEISMIC ISOLATION

The need for seismic isolation of a structure may arise if any of the following situations apply:

- Increased building safety and post-earthquake operability are desired.
- Reduced lateral design forces are desired.
- Alternate forms of construction with limited ductility capacity (such as precast concrete) are desired in an earthquake region.
- An existing structure is not currently safe for earthquake loads.

For new structures current building codes apply in all seismic zones, and therefore many designers may feel that the need for seismic isolation does not exist because the code requirements can be satisfied by current designs. Code designs, however, are generally controlled by a design philosophy which produces structures which are much more prone to damage than their seismic isolated counterparts. A typical building code statement of philosophy[14-23] states that buildings designed in accordance with its provisions will

- resist minor earthquakes without damage,
- resist moderate earthquakes without structural damage but with some nonstructural damage,
- resist major earthquakes without collapse but with structural and nonstructural damage.

These principles of performance also apply to conventional buildings that are rehabilitated to code-level design forces.

Seismic isolation promises the capability of providing a building with better performance characteristics than our current code approach towards conventional buildings and thus represents a major step forward in the seismic design of civil engineering structures. In the case of a building retrofit, the need for isolation may be obvious: the structure may simply not be safe in its present condition should an earthquake occur. In such cases, if seismic isolation is suitable, its effectiveness compared with alternative solutions such as strengthening should be examined.

14.2.1 Solutions for Nonstructural Damage

One of the more difficult issues to address from a conventional design viewpoint is that of reducing nonstructural and building-content damage. This is very often ignored, and when addressed, can be very expensive to incorporate in conventional design. In fact, the cost of satisfying the more stringent bracing requirements of nonstructural elements in a California hospital is on the order of $2 to $4 per square foot more than for ordinary commercial buildings.

There are two primary mechanisms that cause nonstructural damage. The first is related to interstory drift between floors, and the second to floor accelerations. Interstory drift is defined as the relative displacement that occurs between two floors divided by the story height. Floor accelerations are the absolute accelerations that occur as a result of the earthquake, and in conventional construction they generally increase up the height of the building. Together, these two components cause damage to the building contents, architectural facades, partitions, piping and ductwork, ceilings, building equipment, and elevators (Figure 14-1).

Clearly, a design concept that reduces both interstory drifts and floor accelerations combines the best aspects of these two current design philosophies. Seismic isolation is such a concept (Figure 14-2), since it can significantly reduce both floor accelerations and interstory drift and thus provide a viable economic solution to the difficult problem of reducing nonstructural earthquake damage.

14.3 BASIC ELEMENTS OF SEISMIC ISOLATION SYSTEMS

There are three basic elements in any practical seismic isolation system. These are:

1. a flexible mounting so that the period of vibration of the total system is lengthened sufficiently to reduce the force response;
2. a damper or energy dissipater so that the relative deflections between building and ground can be controlled to a practical design level; and
3. a means of providing rigidity under low (service) load levels such as wind and minor earthquakes.

Bridge structures have for a number of years been supported on elastomeric bearings[14-24], and as a consequence have already been designed with a flexible mount. It is equally possible to support buildings on elastomeric bearings, and numerous examples exist where buildings have been successfully mounted on pads. To date this has been done more for vertical-vibration isolation rather than seismic protection. Over 100 buildings in Europe and Australia have been built on rubber bearings to isolate them from vertical vibrations from subway systems below, and are performing well more than 40 years after construction. By increasing the thickness of the bearing, additional flexibility and period shift can be attained.

While the introduction of lateral flexibility may be highly desirable, additional vertical flexibility is not. Vertical rigidity is maintained by constructing the rubber bearing in layers and sandwiching steel shims between layers. The steel shims, which are bonded to each layer of rubber, constrain lateral deformation of the rubber under vertical load. This results in vertical stiffness and of a similar order of magnitude to conventional building columns.

An elastomeric bearing is not the only means of introducing flexibility into a structure, but it appears to be one of the most practical approaches. Other possible devices include rollers, friction slip plates, capable suspension, sleeved piles, and rocking (stepping) foundations (Figures 14-3 to 14-7). The most popular devices for seismic isolation of buildings in the United States are the lead-rubber bearings, high-damping rubber bearings and the friction pendulum system (Figure 14-8).

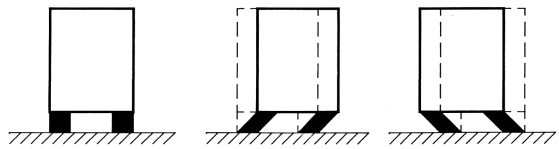

Figure 14-*3*.Elastomeric bearings

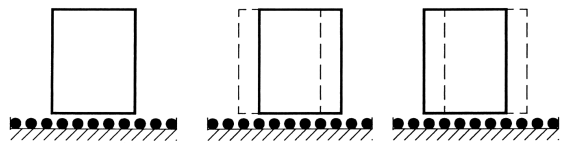

Figure 14-*4*. Rollers

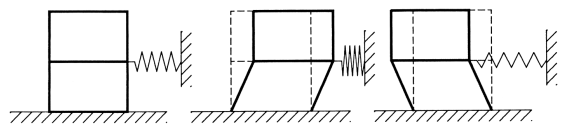

Figure 14-*5*. Sleeved Piles

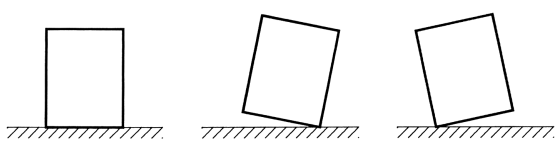

Figure 14-*6*. Rocking

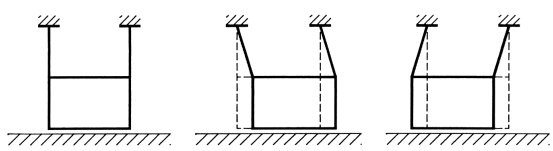

Figure 14-*7*. Cable Suspension

The reduction in force with increasing period (flexibility) is shown schematically in the force-response curve of Figure 14-9. Substantial reductions in base shear are possible if the period of vibration of the structure is significantly lengthened.

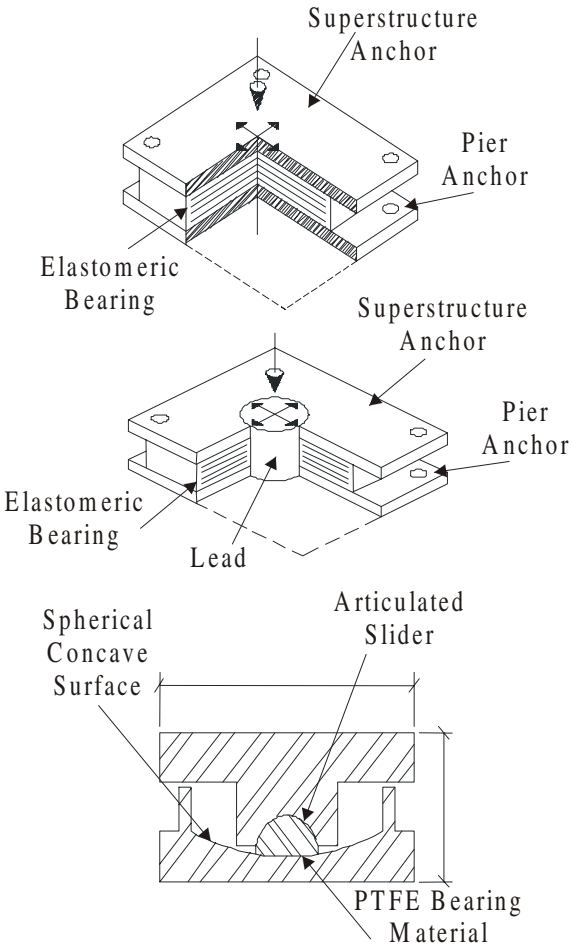

Figure 14-8. Most popular building isolation devices (Top: the high damping rubber device; Middle: the lead-rubber device; Bottom: the friction pendulum device).

The reduction in force response illustrated in Figure 14-9 is primarily dependent on the nature of the earthquake ground motion and the period of the fixed-base structure. Further, the additional flexibility needed to lengthen the period of the structure will give rise to large relative displacements across the flexible mount. Figure 14-10 shows an idealized displacement response curve from which displacements are seen to increase with increasing period (flexibility). However, as shown in Figure 14-11, if substantial additional damping can be introduced into the structure, the displacement problem can be controlled. It is also seen that increasing the damping reduces the forces at a given period and removes much of the sensitivity to variations in ground motion characteristics, as indicated by the smoother force response curves at higher damping levels. Care must be taken, however, not to induce excessive damping into the system because that could produce story accelerations difficult to pin down in an ordinary dynamic analysis.

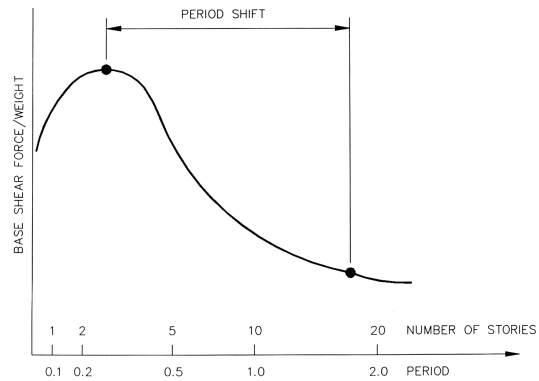

Figure 14-*9.* Idealized force response spectrum

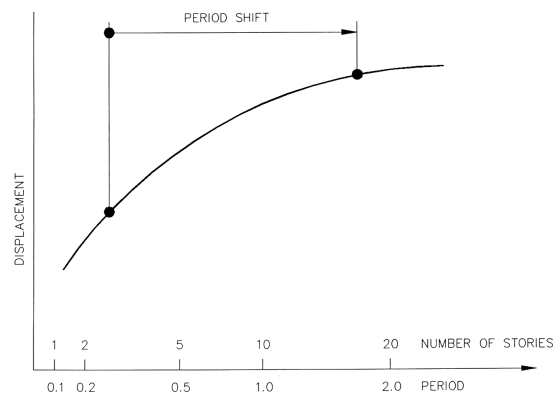

Figure 14-*10.* Idealized displacement response spectrum

Energy Dissipation One of the most effective means of providing a substantial level of damping is through hysteretic energy dissipation. The term "hysteric" refers to the offset in the loading and unloading curves under cyclic loading. Work done during loading is not completely recovered during unloading, and the difference is lost (dissipated) as heat. Figure 14-12 shows an idealized force-displacement loop, where the enclosed area is a

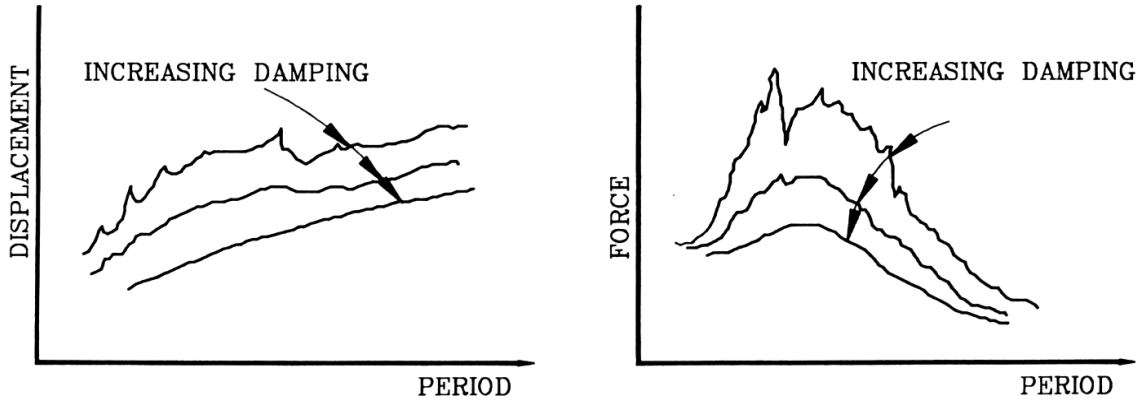

Figure 14-*12*. Response spectra for increasing damping

measure of the energy dissipated during one cycle of motion. Mechanical devices which use friction or the plastic deformation of either mild steel or lead to achieve this behavior have been developed [14-9 to 14-14], and several mechanical-energy dissipation devices developed in New Zealand are shown in Figure 14-13.

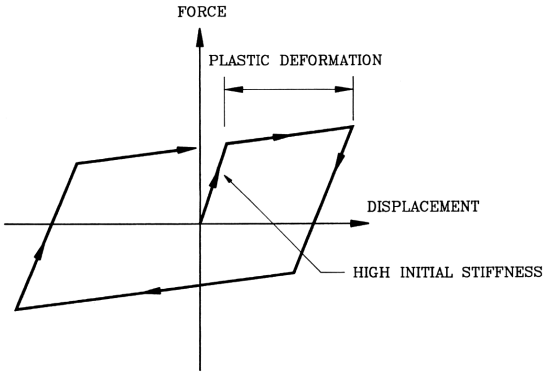

Figure 14-*11*. Hysteretic force-deflection curve

Many engineering materials are hysteretic by nature, and all elastomers exhibit this property to some extent. By the addition of special-purpose fillers to elastomers, it is possible to increase their natural hysteresis without unduly affecting their mechanical properties[14-10]. Such a technique gives a useful source of damping, but so far it has not been possible to achieve the same level of energy dissipation as is possible with, say, a lead-rubber elastomeric bearing or supplemental viscous dampers.

Friction is another source of energy dissipation which is used to limit deflections. However, with the exception of the friction pendulum system, it can be a difficult source to quantify. A further disadvantage is that most frictional devices are not self-centering, and a permanent offset between the sliding parts may result after an earthquake. The friction pendulum system overcomes this problem by using a curved rather than flat surface on which the friction occurs. In proportioning a lead-rubber system or a friction pendulum system care must be exercised in design to ensure that the restoring force during expected seismic events would overcome the resistance of the device to self-centering. In practice it is common to compliment lead-rubber bearings with ones without a lead core and this approach has proved to be very successful.

Hydraulic damping has been used successfully in some bridges and a few special-purpose structures[14-7]. Potentially high damping forces are possible from viscous fluid flow, but maintenance requirements and high initial cost have restricted the use of such devices.

Rigidity for low lateral loads and flexibility for high seismic loads is very desirable. It is clearly undesirable to have a structural system

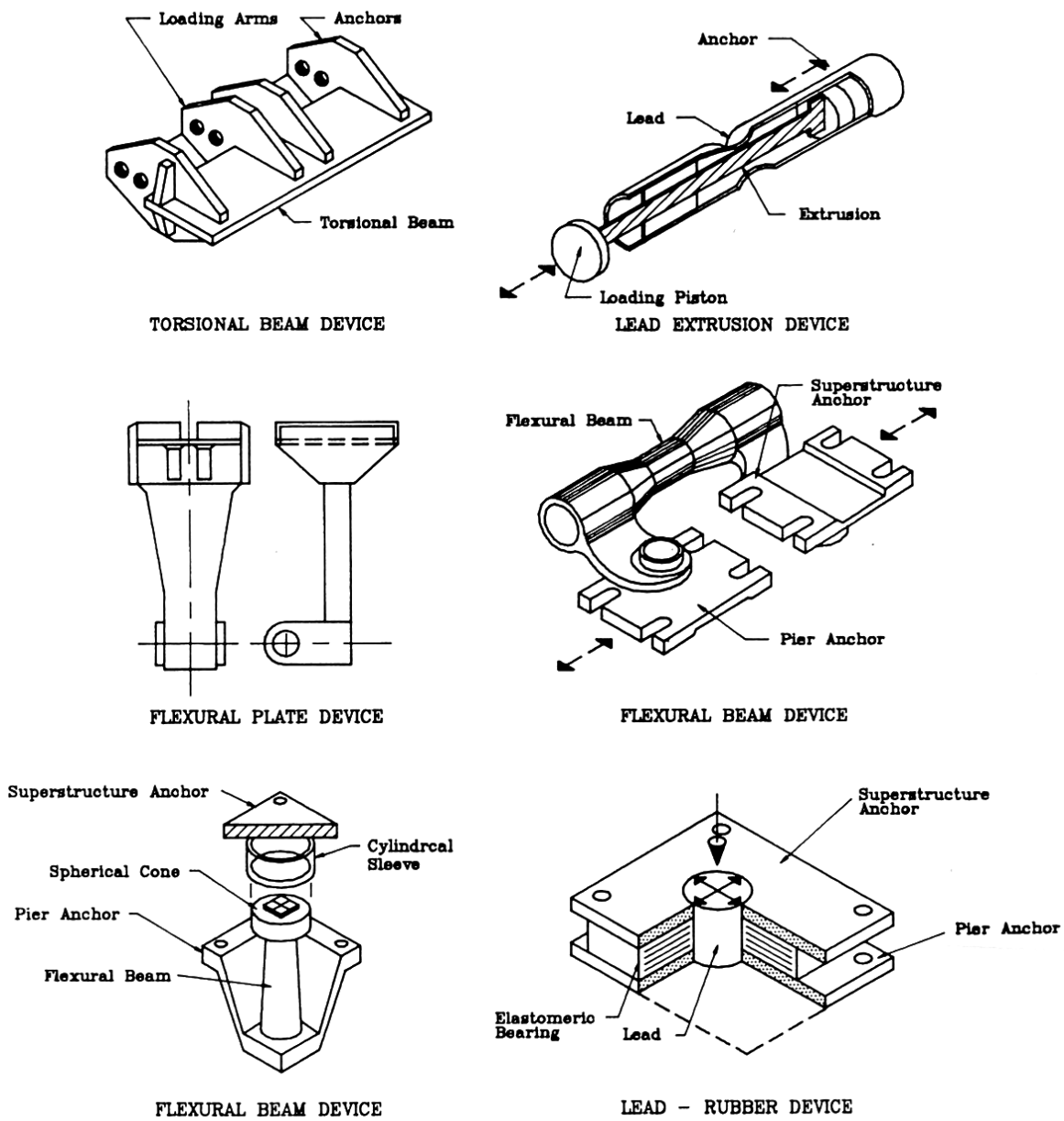

Figure 14-*13.* Various mechanical energy dissipaters

which will vibrate perceptibly under frequently occurring loads such as minor earthquakes or wind loads.

Lead-rubber bearings, well designed high damping rubber bearings, as well as other mechanical-energy dissipaters provide the desired low load rigidity by virtue of their high elastic stiffness (Figure 14-14). Some other seismic isolation systems require a wind restraint device for this purpose—typically a rigid component designed to fail under a given level of lateral load. This can result in a shock loading being transferred to the structure due to the sudden loss of load in the restraint. Nonsymmetrical failure of such devices can also introduce undesirable torsional effects in a

building. Further, such devices will need to be replaced after each failure.

Table 14-1 summarizes the sources of flexibility that have been discussed above. A more detailed explanation of these concepts can be found in the proceedings of two workshops on base Isolation and Passive Energy Dissipation that have been conducted by Applied Technology Council[14-25 and 14-41] as well as a recent textbook by Naeim and Kelly[14-8].

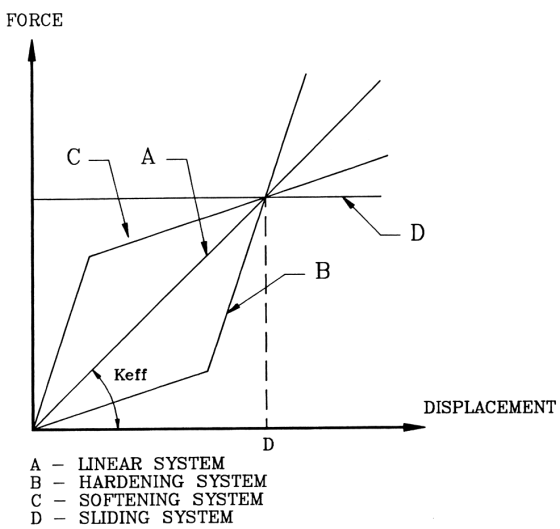

Figure 14-*14*. Idealized force-displacement relationships for isolation systems

Table 14-*1*. Alternative Sources of Flexibility and Energy Dissipation

Flexible Mounting Systems
Unreinforced rubber blocks
Elastomeric bearings
(reinforced rubber blocks)
Sliding plates
Roller and / or ball bearings
Sleeved piles
Rocking systems
Suspended floors
Air cushions
Slinky springs
Damping Devices/ Mechanisms
Plastic deformation of a metal
Friction
High-damping elastomers
Viscous fluid damping
Tuned mass damping

14.4 FORCE-DEFLECTION CHARACTERISTICS

Conceptually, there are four basic types of force-deflection relationships for isolation systems. These idealized relationships are shown in Figure 14-15, with each idealized curve having the same design displacement D for the design-level earthquake.

A linear isolation system is represented by curve A and has the same isolated period for all earthquake load levels. In addition, the force generated in the superstructure is directly proportional to the displacement across the isolation system. A linear isolation system will require some form of wind-restraining mechanism to be added to the system.

A hardening isolation system is represented by curve B. This system is soft initially (long effective period) and then stiffness (effective period shortens) as the earthquake load level increases. When the earthquake load level induces displacements in excess of the design displacement in a hardening system, the superstructure is subjected to higher forces and the isolation system to lower displacements than in a comparable linear system. Like a linear system, a hardening system will also require some form of additional wind-restraining mechanism.

A softening isolation system is represented by curve C. This system is stiff initially (short effective period) and softens (effective period lengthens) as the earthquake load level induces displacements in excess of the design displacement in a softening system, the superstructure is subjected to lower forces and the isolation system to higher displacements than in a comparable linear system. The high initial stiffness of a softening system is the wind-restraining mechanism.

A flat sliding isolation system is represented by curve D. This system is governed by the friction force of the isolation system. As in the softening system, the effective period lengthens as the earthquake load level increases, and the loads of the superstructure remain constant. The displacement of the sliding isolation system

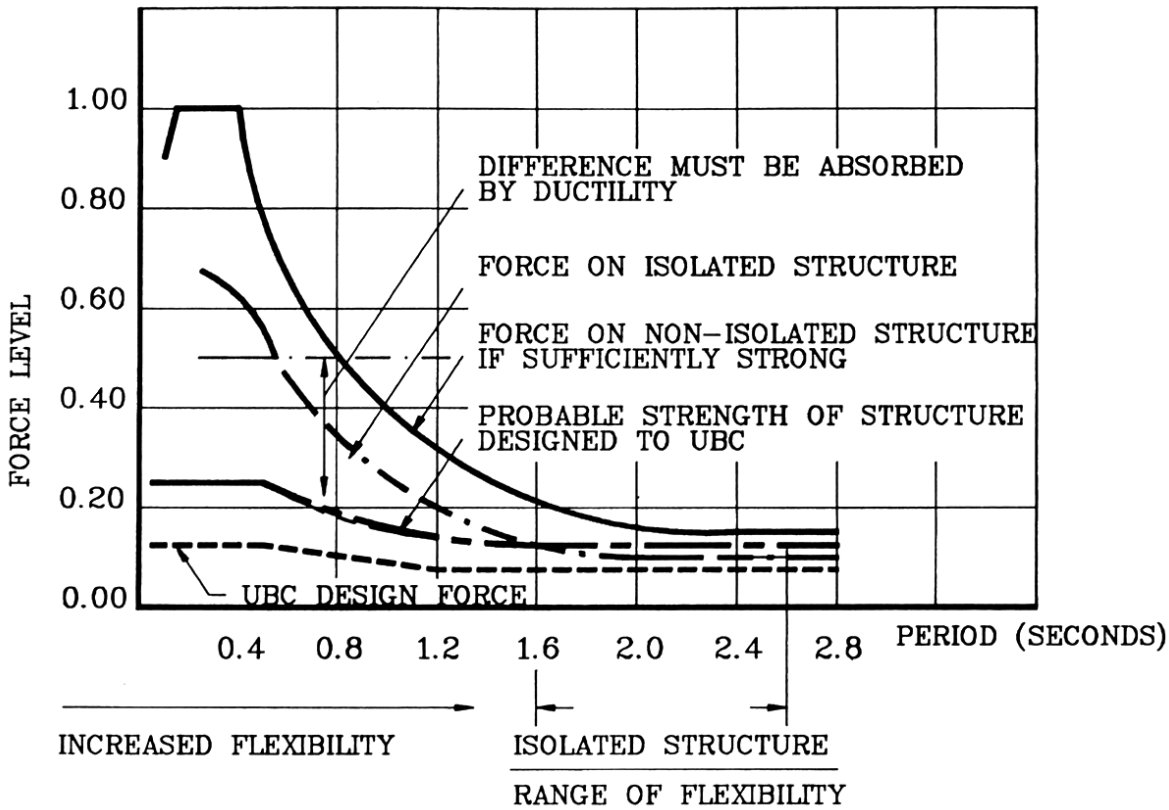

Figure 14-*15*. Design principles of seismic isolation

after repeated earthquake cycles is highly dependent on the vibratory characteristics of the ground motion and may exceed the design displacement. Consequently, minimum design requirements do not adequately define the peak seismic displacement for seismic isolation systems governed solely by friction forces. The value of the coefficient must be high enough to resist the wind forces.

14.5 SEISMIC-ISOLATION DESIGN PRINCIPLES

The design principles for seismic isolation are illustrated in Figure 14-16. The top curve of this figure shows the realistic forces based on a 5% ground response spectrum which will be imposed on a non-isolated structure from typical code forces[14-28]. The spectrum shown is for a rock site if the structure has sufficient elastic strength to resist this level of load. The lowest curve shows the forces which a typical code[14-28] requires a structure to be designed for, and the second-lowest curve shows the probable strength assuming the structure is designed for the corresponding code forces. The probable strength is typically about 1.5 to 2.0 times higher than the design strength because of the design load factors, actual material strengths which are greater in practice than those assumed for design, conservatism in structural design, and other factors. The difference between the maximum elastic force and the probable yield strength is an approximate indication of the energy which must be absorbed by ductility in the structural elements.

When a building is isolated, the maximum elastic forces are reduced considerably due to period shift and energy dissipation, as shown in

Figures 14-10 and 14-12. The elastic forces on a seismically isolated structure are shown by the dashed curve in Figure 14-16. This curve corresponds to a system with as high as 30% equivalent viscous damping.[14-29]

If a stiff building, with a fixed-base fundamental period of 1.0 sec or less, is isolated, then its fundamental period will be increased into the 1.5- to 2.5-sec range (Figure 14-10). This results in a reduced code design force (Figure 14-16), but more importantly in the 1.5- to 2.5-sec range the probable yield strength of the isolated building is approximately the same as the maximum forces to which it will be subjected. Therefore, there will be little or no ductility demand on the structural system, and the lateral design forces can be theoretically reduced by approximately 50%, if the building code permits such a reduction.

14.6 FEASIBILITY OF SEISMIC ISOLATION

Structures are generally suitable for seismic isolation if the following conditions exist:

- The subsoil does not produce a predominance of long period ground motion such as that obtained in Mexico City.
- The structure has two stories or more (or is unusually heavy).
- The site permits horizontal displacements at the base of the order of 8 in. or more.
- The structure is fairly squat.
- Wind lateral loads and other non-earthquake load are less than approximately 10% of the weight of the structure.

Each project must be assessed individually and early in the design phase to determine its suitability for seismic isolation. For this assessment, there are differences between new construction and the retrofit of the existing structures. The following sections provide some guidelines for each of the situations.

14.6.1 New Construction

Structure The first consideration in assessing the suitability of a new project is the structure itself. Seismic isolation achieves a reduction in earthquake forces by lengthening the period of vibration at which the structure responds to the earthquake motions. The most significant benefits obtained from isolation are in structures for which the fundamental period of vibration without base isolation is short—less than 1 sec. The natural period of a building generally increases with increasing height. Taller buildings reach a limit at which the natural period is long enough to attract low earthquake forces without isolation.

Therefore seismic isolation is most applicable to low-rise and medium-rise buildings and becomes less effective for high-rise ones. The cut-off depends mainly on the type of framing system. Shear-wall structures and braced-frame structures are generally stiffer than moment frames of equivalent height, and so, for shear walls and braced frames isolation may be effective up to 12 to 15 stories, whereas with moment frames the cut-off is generally about 8 to 10 stories. These numbers are only generalizations and there are, of course, exceptions, as discussed to the retrofits of the 19-story Oakland City Hall and the 28-story Los Angeles City Hall. The isolation system must also resist maximum lateral loads from other sources without yielding in order to avoid unacceptable displacements and vibrations under service loads, such as wind. Therefore, if these service lateral loads exceed about 10% of the structure's weight, the building should not be isolated.

Soil Conditions The second consideration when assessing the suitability of a structure for seismic isolation is the soil condition and the geology of the site. Generally, the stiffer the soil, the more effective the isolation.

The flexibility of the structure determines how it will respond to a given earthquake motion. However, the form of the earthquake motion as it arrives at the base of a structure may be modified by the properties of the soil

through which the earthquake waves travel. If the soil underlying the structure is very soft, the high frequency content of the motion may be filtered out, and the soil may produce long-period motions. An extreme example of this was seen in the 1985 Mexico City earthquake. Lengthening the period of a stiff structure in these lake-bed soil conditions will amplify rather than reduce the ground motions, and hence for sites such as Mexico City seismic isolation should not be considered.

Another geologic consideration is the distance from a major fault. For near-fault situations, generally the design forces and displacements are amplified to allow for the recently observed fling or pulse effect of near-fault ground motions.

Adjacent Structures A third consideration in assessing suitability is any constraints imposed by adjacent structures at the proposed site. As discussed earlier, the basic concept of seismic isolation systems minimize these displacements, but nevertheless base displacements of the order of 8 to 20 in. generally occur. If the site is very confined due to neighbouring buildings built on the boundary, it may not be possible to accommodate these displacements.

14.6.2 Retrofit of Existing Structures

Retrofit of existing structures to improve their earthquake safety involves additional considerations, compared with new construction, because of the constraints already present. Some structures are inherently more suitable for retrofit using seismic isolation than others. For example, bridge superstructures are generally supported on steel bearings. Replacement of these bearings with elastomeric ones is a fairly simple, low-cost operation that will lead to a reduction in earthquake forces and allow the option of redistributing forces away from the weak substructures into abutments more capable of sustaining them[14-30].

Buildings are often more difficult to retrofit than bridges. However, seismic isolation may often be an effective solution for increasing the earthquake safety of existing buildings without the addition of new structural elements which detract from the features which originally make the building worth preserving. Although seismic isolation reduces earthquake forces, it does not eliminate them. Consequently, the strength and ductility of an existing structure must at least be sufficient to resist the reduced forces that result from isolation. If the strength of the existing structure is extremely low (less than 0.05 of the weight of the building), then additional strengthening versus some strengthening and the provision of isolation will need to be studied.

In addition to the conditions discussed above from new buildings, the issues to be addressed in the seismic isolation retrofit of an existing structure are:

- Is there sufficient clearance with adjacent buildings to permit a movement of 6 to 24 inches?
- Do the building and its existing foundations have sufficient strength and ductility to resist the reduced seismic forces?
- What is the appropriate level for the plane of isolation—foundation level, basement level, ground level, or the top, bottom, or mid-height of the columns?
- The pros and cons with regard to the plane of isolation are:
- Any structure with a full subbasement or basement that can be temporarily disrupted is a good isolation candidate, since the work can be confined to that area.
- A structure with piled foundations can be more easily retrofitted at the foundation level than one with spread footings.
- Provisions for the zone of isolation at the top, bottom, or mid-height of the basement-, first-, or second-level columns requires a detailed evaluation of the column capacities. If the strength of the column is not sufficient to resist the reduced isolation forces, three potential options exist. First, the column may be strengthened and act as a cantilever. Second, a new framing system with stiff beams may be developed at the plane of isolation to reduce the column forces. Third,

the mid-height column solution may be considered, since it reduces the column moments significantly.

In summary, seismic rehabilitation of an existing structure provides the ability to confine most of the construction work to the level where the plane of isolation is to be provided, whereas conventional methods generally require the addition of structural elements to all levels of the building. This trade-off can be very important if continued use of the facility is desired, as in hospitals or command and control centers.

14.6.3 Uplift and Overturning

In many types of structural systems increasing lateral forces will induce net tensions in elements once the axial loads caused by the overturning moment exceeds the gravity loads. This may occur for example at the edges of shear walls or the columns in braced or moment-resisting frames.

In conventional design this tension is resisted in the base connections and foundations, although only if it occurs under the code levels of the earthquake lateral loads. The more severe loading occurring under actual maximum earthquakes will produce overturning moments much greater than the design value, and therefore tension forces will be induced even where none are indicated under code loading. In this case, it is assumed that the structural detailing and redundancies are sufficient to prevent failure due to the uplift.

More recent studies[14-16] have indicated that uplift may in fact be beneficial in reducing earthquake forces in conventional structures. In Fact, at least two actual structures in New Zealand have been explicitly designed for uplift as a form of seismic isolation: a stepping bridge and a chimney stack.

For a structure isolated on elastomeric bearings, the effects of uplift must be examined more carefully, since the elastomeric bearing is not suitable for resisting large tensile loads. For a fully bolted connection, an elastomeric bearing can resist 250 to 300 psi in tension before significant softening of the bearing occurs.

Therefore, if uplift is indicated in an isolated structure, detailed analysis must be performed to quantify the vertical displacements for connection design. This involves a nonlinear analysis with realistic maximum credible earthquake records and requires significant analytical effort.

To avoid this, the optimum strategy is to avoid or minimize uplift. This is done by careful configuration of the lateral load-resisting elements. The important parameters are the height-to-width ratio of the lateral load-resisting system and the amount of gravity load carried by these elements. Another alternative is to utilize the “loose-bolt” connections which permit certain amount of isolator uplift without subjecting the bearing to net tension. Such connections have been successfully implemented in several major buildings in southern California such as the Los Angeles City Hall seismic retrofit and the Lake Arrowhead and Saint John new hospital buildings.

14.7 DESIGN CODE REQUIREMENTS

By the time this book reaches the market the design of new seismically isolated buildings in United States will be probably governed by the International Building Code 2000 (IBC-2000)[14-42]. It is likely, however, that design in some jurisdictions will be still controlled by the provisions of the IBC-2000 predecessor, (UBC-97)[14-43]. As documented by Naeim and Kelly)[14-8] UBC-97 is an unnecessarily complicated and conservative as far as seismic isolation design is concerned. Therefore, in this section we limit our discussion to the provisions of IBC-2000. Readers who are interested in learning more about UBC-97 and its predecessors are referred to the referenced textbook by Naeim and Kelly.

Primarily intended to regulate the design of new buildings, the IBC-2000 does not really cover the retrofit of existing buildings using

isolation, although most retrofit projects do follow either the IBC or UBC regulations closely. IBC-2000 regulations are written in such a way as to be nonspecific with respect to isolation systems. No particular isolation systems are identified as being acceptable, but the regulations require that any isolation system should be stable for the required displacement, provide increasing resistance with increasing displacement, and have properties that do not degrade under repeated cyclic loading.

The underlying philosophy is that an isolated building designed using IBC-2000 will out-perform fixed-base construction in moderate and large earthquakes. It is not the intent of the code to reduce the construction cost but to minimize damage to isolated structures and their contents.

Increasingly, the seismic upgrade design of existing structures is influenced by the NEHRP Guidelines for the Seismic Rehabilitation of Buildings (FEMA-273) and its commentary (FEMA- 274), which are published by the Federal Emergency Management Agency[14-44, 14-45]. FEMA-273 provisions are very similar to those of the IBC-2000 with one exception: FEMA-273 permits a new analysis approach called *Static Nonlinear Analysis* or the *"Pushover"* method (see Chapter 15).

A 1986 document published by a subcommittee of the Structural Engineers Association of Northern California (SEAONC) and generally referred to as the *Yellow Book*[14-26] has served as the backbone of all new code provisions.

The seismic criteria adopted by current model codes involve a two-level approach to seismic hazard, which are as follows:

– The Design Basis Earthquake (DBE): That level of ground shaking that has a 10% probability of being exceeded in 50 years (475 year-return period earthquake)
– The Maximum Considered Earthquake (MCE): The maximum level of ground shaking that may ever be expected at the building site. MCE is taken as 2% probability of being exceeded in 50 years (2500-year return period earthquake). Notice that this is different from UBC-97 definition of MCE which was 10% probability of being exceeded in 100 years (1000-year return period earthquake)

14.7.1 Design Methods

Static Analysis: For all seismic isolation designs it is necessary to perform a static analysis. This establishes a minimum level for design displacements and forces. The static analysis is also useful both for preliminary design of the isolation system and the structure when dynamic analysis is required and for design review; under certain circumstances it may be the only design method used.

Static analysis alone will suffice if:

1. The structure is located at a site with $S_1 \leq$ 0.60g. S_1 is determined using the spectral acceleration maps published as a part of IBC-2000.
2. The site soil is classified as Class A, B, C, or D (see Chapter 3).
3. The structure above the isolation plane is not more than four stories or 65 feet in height.
4. The effective period at maximum displacement of the isolated system, T_M, does not exceed 3.0 seconds.
5. The effective period at design displacement, T_D, is greater than three times the elastic, fixed-base period of the structure.
6. The structural system above the isolation plane is regular.
7. The effective stiffness of the isolation system at design displacement is greater than one third of the effective stiffness at 20% of design displacement.
8. The isolation system can produce the restoring force requirements mandated by the code (IBC-2000 Sec. 1623.5.1.4).
9. The force deflection characteristics of isolation system are independent of rate of loading, vertical load, and bilateral load.
10. The isolation system does not limit MCE displacements to less than S_{M1}/S_{D1} times the total design displacements.

Dynamic Analysis: Dynamic analysis may be used in all cases and must be used if the requirements mentioned for adequacy of static analysis are not satisfied. Dynamic analysis may take the form of response spectrum analysis or time-history analysis.

Response spectrum analysis would suffice if requirements number 2 and 7-10 as mentioned for static analysis, are satisfied. Otherwise, a time-history analysis will be required. Use of more than 30% critical damping is not permitted in response spectrum analysis even if the system is designed to provide for more.

Regardless of the type of dynamic analysis to be performed a site-specific design spectra corresponding to DBE and MCE events must be developed and used (instead of the code published default spectra) if:

- The structure is located on a Class E or F site, or
- The structure is located at a site with $S_1 \leq$ 0.60g.

If time history analysis is to be performed, then a suite of representative earthquake ground motions must be selected that satisfy the following requirements:

1. At least three pairs of recorded horizontal ground motion time-history components should be selected and used.
2. The time histories should be consistent with the magnitude, fault distance, and source mechanisms that control the DBE and/or MCE events.
3. If appropriate recorded time-histories are not available, appropriate simulated time-histories may be used to make up the the total number of required records.
4. For each pair of horizontal ground motion components, the square root sum of the squares (SRSS) of the 5 percent-damped spectrum of the scaled horizontal components is to be constructed.
5. The time-histories are to be scaled such that the average value of the SRSS spectra does not fall below 1.3 times the 5 percent-damped design spectrum (DBE or MCE) by more than 10 percent over a range of $0.5T_D$ to $1.25T_M$ where T_D and T_M are effective isolated periods at design displacement and maximum displacement, respectively.
6. Each pair of time histories is to be applied simultaneously to the model considering the most disadvantageous location of mass eccentricity. The maximum displacement of the isolation system is to be calculated from the vectorial sum of the two orthogonal components at each time step.
7. The parameters of interest are calculated for each time-history analysis. If three time history analyses are performed, then the maximum response of the parameter of interest is to be used for design. If seven or more time histories are used, then the average value of the response parameter of interest may be used.

As Naeim and Kelly have pointed out [14-8], this formulations contains implicit recognition of the crucially important fact that design spectra are definitions of a criteria for structural analysis and design and are not meant to represent characteristics of a single event.

14.7.2 Minimum Design Displacements

Four distinct displacements calculated using simple formulas and used for static analysis, also serve as the code permitted lower bound values (subject to some qualification) for dynamic analysis results. These are:

- D_D: the design displacement, being the displacement at the center of rigidity of the isolation system at the DBE;
- D_M: the displacement,at the center of rigidity of the isolation system at the MCE;
- D_{TD}: the total design displacement, being the displacement of a bearing at a corner of the building and includes the component of the torsional displacement in the direction of D_D
- D_{TM}: same as D_{TD} but calculated for MCE.

DD and DM are simply spectral displacement values calculated assuming constant spectral velocity from code published spectral maps and adjusted for damping.

$$D_D = \left(\frac{g}{4\pi^2}\right)\frac{S_{D1}T_D}{B_D} \tag{14-1}$$

$$D_M = \left(\frac{g}{4\pi^2}\right)\frac{S_{M1}T_M}{B_M} \tag{14-2}$$

where g is the gravitational acceleration, S_{D1} and S_{M1} are spectral coefficients, T_D and T_M are isolated periods, and B_D and B_M are damping coefficients corresponding to the DBE and MCE level responses, respectively.

S_{D1} and S_{M1} are functions of two parameters:

- S_1, the MCE 5% damped spectral acceleration for the site available from the maps accompanying the IBC-2000 and also available on Internet via the USGS and CDMG web sites, and
- F_v, the site coefficient defined for various site classes and acceleration levels (see Chapter 3).

Such that

$$S_{M1} = F_v S_1 \tag{14-3}$$

$$S_{D1} = \frac{2}{3} S_{M1} \tag{14-4}$$

The effective damping in the system, β , at the DBE and MCE response levels (referred to as β_D and β_M are computed from

$$\beta_D = \frac{1}{2\pi}\left(\frac{\text{total area of hysteresis loop}}{K_{D,\max} D_D^2}\right) \tag{14-5}$$

$$\beta_M = \frac{1}{2\pi}\left(\frac{\text{total area of hysteresis loop}}{K_{M,\max} D_M^2}\right) \tag{14-6}$$

K_{Dmax} and K_{Mmax} are effective stiffness terms defined in Section 14.7.3. The damping reduction factors B_D for the DBE and B_M for the MCE are given in a tabular form (IBC-2000, Table 1623.2.2.1), with linear interpolation to be used for intermediate values. A very close approximation to the table values is given by Naeim and Kelly[14-8] as

$$\frac{1}{B} = 0.25(1 - \ln \beta) \tag{14-7}$$

where β is given as the fraction of critical damping (not as a percentage).

14.7.3 Effective Isolated System Periods

The effective isolated periods T_D and T_M corresponding to the DBE and MCE response are computed from

$$T_D = 2\pi\sqrt{\frac{W}{K_{D\min} g}} \tag{14-8}$$

$$T_M = 2\pi\sqrt{\frac{W}{K_{M\min} g}} \tag{14-9}$$

where

W = the weight of the building

g = gravity

K_{Dmin} = minimum effective horizontal stiffness of the isolation system at the design displacement (DBE).

K_{Mmin} = minimum effective horizontal stiffness of the isolation system at the maximum displacement (MCE).

The values of K_{Dmin}, and K_{Mmin} are not known to the engineer during the preliminary design phase. The design procedure will begin with an assumed value which is obtained from previous tests on similar components or by using the material characteristics and a schematic of the proposed isolator. After the preliminary design is satisfactorily completed, prototype isolators will be ordered and tested, and the values of K_{Dmin}, K_{Dmax}, K_{Mmin}, and K_{Mmax} will be obtained from the results of the prescribed program of tests on the prototypes.

The total design displacements, D_{TD} and D_{TM} (which include torsion), are

$$D_{TD} = D_D\left(1 + y\frac{12e}{b^2 + d^2}\right) \quad (14\text{-}10)$$

$$D_{TM} = D_M\left(1 + y\frac{12e}{b^2 + d^2}\right) \quad (14\text{-}11)$$

where b and d are plan dimensions at the isolation plane, e is the actual eccentricity plus 5% accidental eccentricity, and y is the distance to a corner perpendicular to the direction of seismic loading.

14.7.4 Design Forces

The superstructure and the elements below the isolation interface are designed for forces based on the DBE design displacement, D_D. The isolation system, the foundation and structural elements below the isolation system must be designed to withstand the following minimum lateral seismic force

$$V_b = K_{D\max} D_D \quad (14\text{-}12)$$

If other displacements rather than D_D generate larger forces, then those forces should be used in design rather than the force obtained from Equation 14-12.

The structure above the isolation plane should withstand a minimum shear force, V_s, as if it was fixed base where:

$$V_s = \frac{K_{D\max} D_D}{R_I} \quad (14\text{-}13)$$

In above equations K_{Dmax} is the maximum effective stiffness of the isolation system at the design displacement (DBE) in the horizontal direction and R_I is a reduction factor analogous to the R factor that would have been used for the superstructure if it was not isolated (see Chapter 5). IBC-2000 defines RI as

$$1.0 \le R_I = \frac{3}{8}R \le 2.0 \quad (14\text{-}14)$$

If dynamic analysis is performed, it is possible to have design displacements and design forces that are less than those given by Equations 14-12 and 14-13. In such cases, The total design displacement, D_{TD} , for the isolation system can be reduced to not less than 90% of that given by the static formula, and the total maximum displacement, D_{TM} , can be reduced to not less than 80% of the static formula result. Furthermore, the code permits a further reduction by replacing D_D and D_M in the static formulas by D'_D and D'_M , where

$$D'_D = \frac{D_D}{\sqrt{1 + \left(T/T_D\right)^2}} \quad (4\text{-}14)$$

$$D'_M = \frac{D_M}{\sqrt{1 + \left(T/T_M\right)^2}} \quad (4\text{-}15)$$

In all cases the value of V_s should not be less than

- the seismic force required by the code provisions for a fixed-base structure;
- the base shear corresponding to the factored design wind load
- one and a half times the lateral force required to fully activate the isolation system, i.e., the yield load of a lead-plug rubber bearing or slip threshold of a sliding bearing system

14.7.5 Vertical Distribution of Design Force

In order to conservatively consider participation of higher modes in response, the vertical distribution of the force on the superstructure of an isolated building is similar to that prescribed for fixed-base construction.

This is so, although the seismic isolation theory suggests a uniform distribution of forces over the height of the superstructure. Therefore, the lateral force at level $_x$, denoted by F_x, is computed from the base shear, V_S, by

$$F_x = V_s \frac{h_x w_x}{\sum_{i=1}^{N} w_i h_i} \tag{14-15}$$

where w_x and w_i are the weights at level i or x and h_x and h_i are the respective heights of structure above isolation level.

14.7.6 Drift Limitations

The maximum interstory drift (relative displacement of adjacent floors) permitted by the IBC-2000 is a function of method of analysis in that more drift is permitted when more sophisticated analyses are performed.

Static Analysis: The drift at any level x is calculated from Equation 14-16 and should not exceed $0.015h_{sx}$ (h_{sx} is the story height below level x).

$$\delta_x = \frac{R_I \delta_{se}}{I_E} \tag{14-16}$$

where δ_{se} is the drift determined by an elastic analysis and I_E is the occupancy importance factor for the building as defined in Chapter 5.

Response Spectrum Analysis: The drift at any level x calculated from response spectrum analysis should not exceed $0.015h_{sx}$.

Time-History Analysis: The drift at any level x calculated from a time-history analysis considering the nonlinear behavior of the isolators should not exceed $0.020h_{sx}$. The code has an additional paragraph stating that this drift should be calculated using Equation 14-16. However, the relevance of such a provision to nonlinear time-history analysis is not clear and this may be just a printing error in the very first edition of the IBC that has just been released at the time of this writing. P-Δ effects must be considered whenever the interstory drift ration exceeds $0.010/R_I$.

14.7.7 Peer Review

IBC-2000 similar to its predecessors requires the design of the isolation system and the related test programs to be reviewed by an independent team of registered design professionals and others experienced in seismic analysis methods and theory and application of seismic isolation. The scope of this review includes, but is not limited to the following items:

1. Review of site-specific design ground motion criteria such as design spectrum and time-histories as well as other project-specific information.
2. Review of the design criteria and the preliminary design procedures and results.
3. Overview and observation of the prototype testing program.
4. Review of the final design of the entire structural system and supporting analyses and calculations.
5. Review of the isolation system quality control and production testing program.

14.7.8 Testing Requirements for Isolators

Code testing requirements of the isolator units before they can be accepted are contained in Section 16.23.8 of IBC-2000. The code requires that at least two full-sized specimens of each type of isolator be tested. The sequence and the necessary number of cycles of testing vary with the amount of deformation the isolators are subjected to. For example, twenty fully reversed cycles of loading is to be performed at a displacement corresponding to the wind design force.

The tests required are a specified sequence of horizontal cycles under D + 0.5L from small horizontal displacements up to D_{TM}. The maximum vertical load used during testing is $1.2DL + 0.5LL + E_{max}$, and the minimum is $0.8DL - E_{min}$ where E_{max} and E_{min} are the

maximum downward and upward load on the isolator that can be generated by an earthquake.

14.7.9 Design Example

Consider a small building with a plan dimension of 150 feet by 70 feet. The total weight of the structure is estimated at 4200 kips. The lateral load resisting system consists of ordinary steel concentrically braced frames (R=5). The building is regular in both the plan and the elevation. The actual distance between the center of mass and the center of rigidity of each floor is 80 inches.

The project site is located in downtown Los Angeles on a site with soil Class C. Evaluation of IBC-2000 seismic hazard maps (see Chapter 3) has produced values of S_S=1.5g and S_1=0.60g. The fixed base period of the building is 0.40 secs. The isolation system should provide effective isolated periods in the vicinity of T_D = 2.0 and T_M = 2.3 seconds, respectively. The anticipated damping is about 15% critical. A margin of $\pm$10% variation in stiffness from the mean stiffness values of the isolators is considered acceptable. Estimate the minimum design displacements, minimum lateral forces, and maximum permitted interstory drift ratios according to the IBC-2000 requirements.

SOLUTION:

T_D and T_M are given. Therefore, from Equations 14-8 and 14-9:

$$2.0 = 2\pi\sqrt{\frac{4200}{386.4K_{D\min}}}$$

$$\Rightarrow K_{D\min} = 107 \text{ kips/in.}$$

$$2.3 = 2\pi\sqrt{\frac{4200}{386.4K_{M\min}}}$$

$$\Rightarrow K_{M\min} = 81 \text{ kips/in.}$$

As specified in the problem, we assume a +10% variation about the mean stiffness values. Therefore,

$$K_{D\max} = (1.10)\frac{107}{0.90} = 131 \text{ k/in.}$$

$$K_{M\max} = (1.10)\frac{81}{0.90} = 99 \text{ k/in.}$$

A Linear interpolation of values of 1.2 and 1.5 given in IBC-2000 Table 1623.2.2.1 for 10% and 20% damping results in B = 1.35. Alternatively, From Equation 14-7:

$$\frac{1}{B} = 0.25(1 - \ln\beta) = 0.25(1 - \ln 0.15) = 0.7243$$

$$B = 1.38$$

The same level of damping is assigned to both DBE and MCE events for preliminary design purposes. The value of Fv = 1.3 is obtained from IBC-2000 Table 1615.1.2 (see Chapter 3) for site Class C and S_1 = 0.60 > 0.50. The Spectral coefficients needed for calculation of minimum displacements are obtained from Equations 14-3 and 14-4:

$$S_{M1} = F_v S_1 = (1.3)(0.60) = 0.78g$$

$$S_{D1} = \frac{2}{3}S_{M1} = \frac{2}{3}(0.78) = 0.52g$$

The minimum design displacements now may be obtained from Equations 14-1 and 14-2 as:

$$D_D = \left(\frac{386.4}{4\pi^2}\right)\frac{(0.52)(2.0)}{1.35} = 7.55 \text{ in.}$$

$$D_M = \left(\frac{386.4}{4\pi^2}\right)\frac{(0.78)(2.3)}{1.35} = 13.02 \text{ in.}$$

The eccentricity needed to calculate total displacements is

$$e = 80 + (0.05)(150)(12) = 170 \text{ in.}$$

and from Equations 14-10 and 14-11 noting that the same multiplier applies to both equations

$$\left(1+y\frac{12e}{b^2+d^2}\right)=$$
$$\left(1+\frac{150}{2}\frac{(170)}{150^2+70^2}\right)=1.47 \text{ and}$$
$$D_{TD}=(7.55)(1.47)=11.1 \text{ in.}$$
$$D_{TM}=(13.02)(1.47)=19.1 \text{ in.}$$

The minimum design shear force for the isolation system and structural elements below the isolation plane is obtained from Equation 14-12:

$$V_b = K_{D\max} D_D = (131)(7.55) = 989 \text{ kips}$$

which corresponds to a seismic base shear coefficient of 0.24. The reduction factor from Equation 14-14 is:

$$R_I = \frac{3}{8}R = \frac{3}{8}(5) = 1.875 \le 2.0$$

The design base shear for design of the superstructure (Equation 14-13) is:

$$V_s = \frac{K_{D\max} D_D}{R_I} = \frac{V_b}{R_I} = \frac{989}{1.875} = 527 \text{ kips}$$

which in turn translates to a seismic base shear coefficient of 0.126. Remember that this force has to be larger than the base shear obtained for a similarly situated fixed-base building with a period of 2.0 sec. The procedure for calculating base shear force for conventional buildings is explained in Chapter 5 and therefore not repeated here.

14.8 SEISMIC-ISOLATION CONFIGURATIONS

The seismic-isolation configuration, including the layout and the installation details for the isolation system, depends on the site constraints, type of structure, construction, and other related factors. The following details are provided as an aid in determining appropriate layouts for particular projects and are not intended to restrict, the designer in individual cases.

14.8.1 Bearing Location

Figures 14-16 to 14-19 provide typical planes of isolation for elastomeric bearings in buildings both with and without separate basement levels. Some of the advantages and disadvantages associated with each layout are listed in the figures. The following general guidelines are considerations for determining a suitable layout:

- The bearing location should permit access for inspection and replacement, should this become necessary.

A full diaphragm above or below the isolators to distribute lateral loads uniformly to each bearing is preferable. If distribution is by tie beams only, the bearings should be arranged in proportion to the lateral load taken by each element, i.e., larger bearings under stiffer elements.

- Free movement for the maximum predicted horizontal displacement must be available.
- A layout which allows stub walls or columns as a backup system for vertical loads should be used wherever possible.
- Consideration must be given to the continuity of services, stairways, and elevators at he plane of isolation.
- Consideration must be given to details for cladding if it will extend below the plane of isolation.

14.8.2 Connection Details

Although connection details vary from each project, the design principles remain the same:

1. The bearing must be free to deform in shear between the outer shims; i.e., the upper surface of the bearing must be able to move freely horizontally.

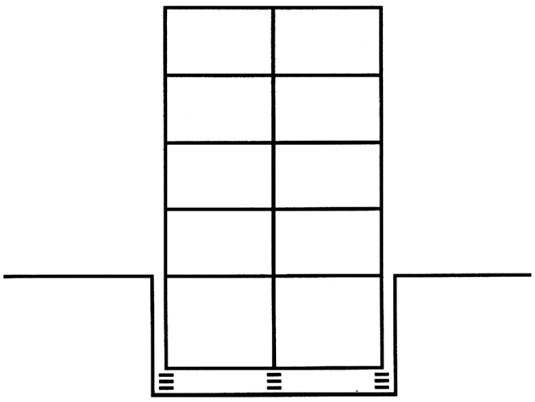

ADVANTAGES

- No special detailing required for separation of internal services such as elevator and stairways.
- No special cladding separation details.
- Base of columns connected by diaphragm at isolation level.
- Simple to incorporate back–up system for vertical loads.

DISADVANTAGES

- Added structural costs unless sub–basement required for other purposes.
- Requires a separate (independent) retaining wall.

Figure 14-16. Bearings located in sub-basement

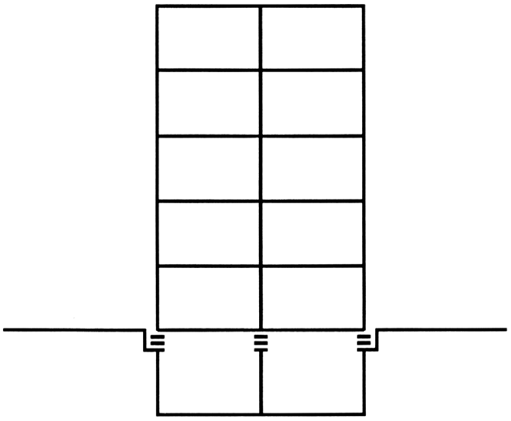

ADVANTAGES

- No Sub–basement Requirement.
- Minimal added structural costs.
- Base of columns connected by diaphragm at isolation level.
- Backup system for vertical loads provided by columns.

DISADVANTAGES

- May require cantilevered elevator shaft below first floor level.
- Special treatment required for internal stairways below first floor level.

Figure 14-*17*. Bearings located at top of basement columns

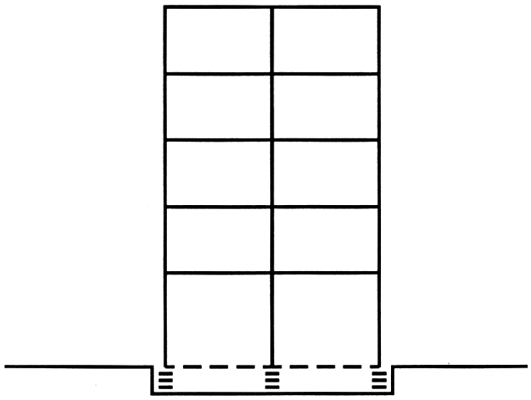

ADVANTAGES

- Minimal added structural costs.
- Separation at level of base isolation is simple to incorporate.
- Base of columns may be connected by diaphragm.
- Easy to incorporate back–up system for vertical loads.

DISADVANTAGES

- May require cantilever pit.

Figure 14-*18*. Bearings located at bottom of first story columns

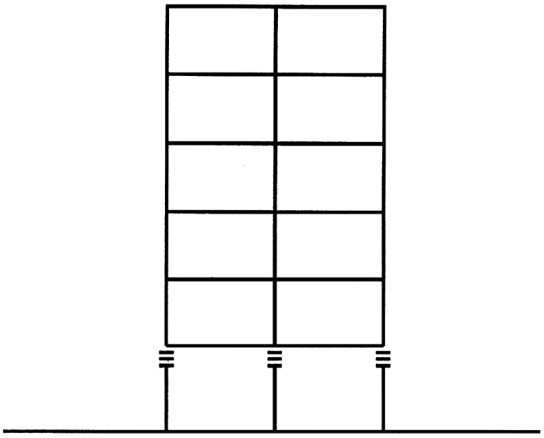

ADVANTAGES

- Minimal added structural costs.
- Economic if first level is for parking.
- Backup system for vertical loads provided by columns.

DISADVANTAGES

- Special detail required for elevators and stairs.
- Special cladding details required if first level is not open.
- Special details required for vertical services.

Figure 14-*19*. Bearings located at top of first story columns

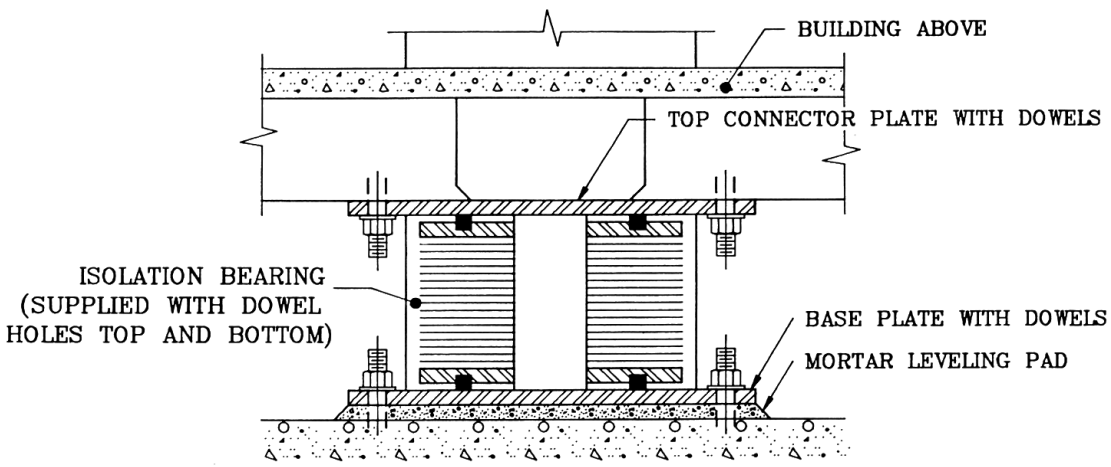

Figure 14-*20.* Installation using dowels

2. The connections must have the capacity for transferring maximum seismic forces between the substructure and the superstructure.
3. Ease of construction must be kept in mind to insure access for installation and, in the case of a retrofit, temporary support for the superstructure.

The most common bearing construction has outer load plates of ¾ - 1½ in. steel covered by 1/8 in. rubber layers. During the manufacture, holes for bolts or dowels are formed through the outer rubber layers and load plates. Exterior cover plates with bolts or dowels are then added to the bearing prior to installation. These exterior plates may be either welded or bolted to the structure. It is important to insure that the bolts or dowels do not intrude into the internal rubber layers. Figure 14-20 is an example of a connection detail using dowels. The more common trend is to use fully bolted rather than dowelled connections.

14.8.3 Provision for Bearing Removal

Where practical, provision should be made to ease removal and replacement of the bearings should this ever be necessary. This requires two things: (i) a means of supporting the building weight while the bearing is removed, and (ii) a means of removing the bearing without undue damage to the connections.

The ease of meeting this first requirement will depend on the location of the bearings and type of backup safety system used. In a subbasement, jacks can generally be used between the foundation and basement floor to support the bearing load. If a backup safety system is used (as described in the following section), provision for jacking may be incorporated into the design. Bearing locations at the top of columns will require shoring to be erected around columns to provide a jacking platform if a backup system has not been provided.

The removal of the bearing once the load is removed will be simplified if bolted connections are used to connect to the structure. For example, the connection detail shown in Figure 14-20 could be modified to simplify bearing removal. In this modification, double plates would be added at the bottom of the bearing as shown in Figure 14-21. The bearing complete with dowel plates could then be removed. For a welded connection, removal would entail cutting the welds.

A combination of a removal and backup safety-system detail is shown in Figure 14-22.

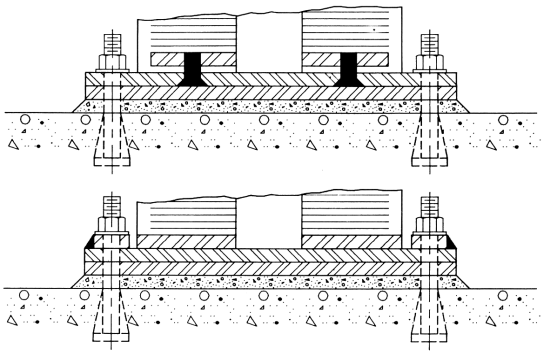

Figure 14-*21.* Details for replacement bearings

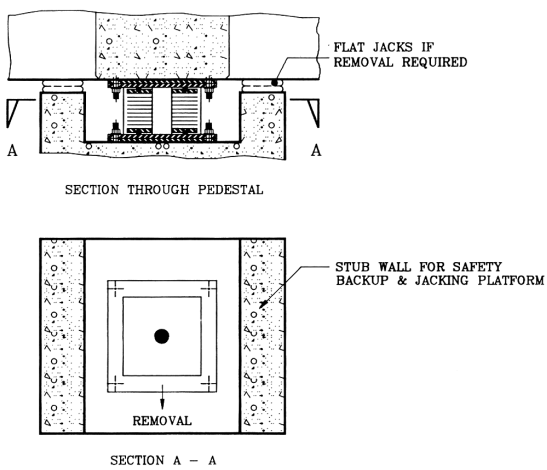

Figure 14-*22.* Backup and removal detail

14.8.4 Backup Safety System

Depending on the importance of the building, it may be considered desirable to incorporate such a system depends on the bearing location and configuration. For bearing locations at the top of columns a layout is shown schematically in Figure 14-23. This provides a means of supporting the vertical load, and a lateral displacement limiter. An alternate to the scheme of location bearings at the top of columns is to locate them at the base of the columns as shown in Figure 14-24.

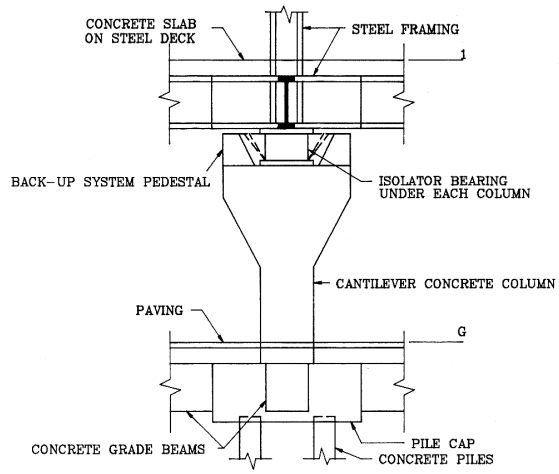

Figure 14-*23.* Bearings at top of columns

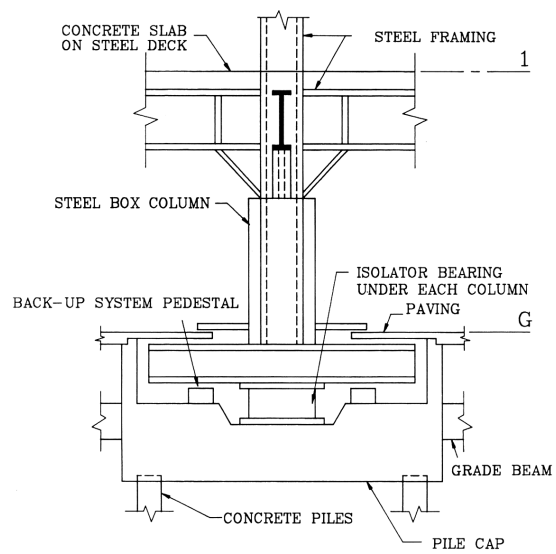

Figure 14-24. Bearings at base of columns

14.9 ISOLATOR DESIGN PROCEDURES

Basic procedures for design of the high damping and low damping rubber isolators (HDR, LDR), lead-rubber isolators (LRB), and the friction pendulum isolators (FPS) are presented in this section. The primary purpose of this information is to aid design engineer in preliminary sizing of the isolators needed for a

given project. For is information The reader is encouraged to read the recent textbook by Kelly[14-46] for a very detailed coverage of mechanical characteristics and modeling of HDR and LRB isolators. A less exhaustive but more practical coverage of the same topics may be found in a recent textbook by Naeim and Kelly[14-8]. Further instructions and details for design of FPS isolators may be obtained from the patent-holder, Earthquake Protection Systems of Berkeley, California and from Reference 14-40.

The need for an isolation system which is stiff under low levels of lateral load (e.g. wind) but flexible under higher levels (i.e. earthquakes) necessarily leads to a nonlinear system. The properties of most isolator systems are characterized as bilinear. Although a tri-linear model with stiffening at large horizontal displacements better represents the performance of HDR isolators.

Any complete design procedure should insure that (i) the bearings will safely support the maximum gravity service loads throughout the life of the structure and (ii) the bearings will provide a period shift and hysteric damping during one or more design earthquakes. The steps to achieve these aims are:

1. The minimum required plan size is determined for the maximum gravity loads at each bearing location.
2. The total rubber thickness or dimensions of the FPS isolator is computed to give the period shift during earthquake loadings.
3. The damping characteristics of the isolator system is calculated to ensure proper value of the hysteric damping and wind resistance required.
4. The performance of the bearings as designed is checked under gravity, wind, thermal, earthquake, and any other load conditions.

14.9.1 Elastomeric Isolators

One of the most important parameters in design of elastomeric bearings is the shape factor, S, defined as

$$S = \frac{\text{loaded area}}{\text{force - free area}}$$

For a circular pad with a diameter of Φ and a single layer rubber thickness, t

$$S = \frac{\Phi}{4t} \tag{14-17}$$

Generally a good design tries to keep the value of S to somewhere between 10 and 20.

The horizontal stiffness of a single isolator is given by

$$K_H = \frac{GA}{t_r} \tag{14-18}$$

where G is the shear modulus of the rubber, A is the full cross-sectional area of the pad, and t_r is the total thickness of rubber. The maximum shear strain, γ, experienced by the isolator is the maximum horizontal displacement, D, divided by the total rubber thickness, t_r.

$$\gamma = \frac{D}{t_r} \tag{14-19}$$

The vertical stiffness of a rubber bearing is given by

$$K_V = \frac{E_c A_s}{t_r} \tag{14-20}$$

where E_c is the compression modulus of the rubber-steel composite and A_s is the area of a steel shim plate. For a circular pad without any holes in the center

$$E_c = 6GS^2 \tag{14-21}$$

For bearings with very large shape factors the compressibility of rubber affects the value of E_c. In such cases a more accurate estimate of E_c may be obtained from

$$E_c = \frac{6GS^2K}{6GS^2 + K} \tag{14-22}$$

where K is the bulk modulus of rubber and generally varies from 145,000 psi to 360,000 psi depending on the type of rubber being used. The value of 290,000 psi is most commonly used.

14.9.2 Lead-Rubber Isolators (LRB)

The lead-rubber bearings is a nonlinear system which may be very effectively idealized in terms of a bilinear force—deflection curve with constant values throughout many cycles of loading (Figure 14-25). Formulas developed in the previous section are also applicable here with some additional equations that model the lead core properties.

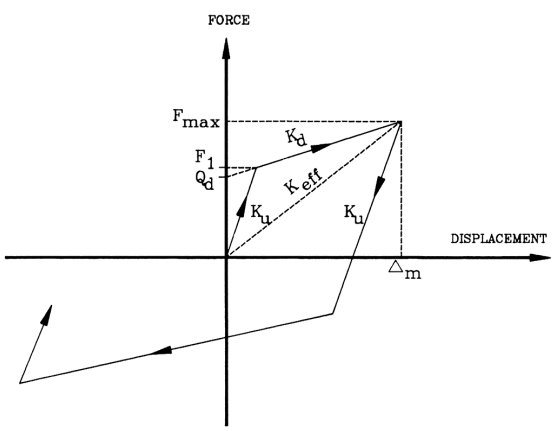

Q_d = Characteristic strength (kips)
F_1 = Yield force (kips)
F_{max} = Maximum force (kips)
K_d = Post-elastic stiffness (kip/inch)
K_u = Elastic (unloading) stiffness (kip/inch)
K_{eff} = Effective stiffness
$\triangle_m$ = Maximum bearing displacement

Figure14-25. Typical bilinear hysteresis loop

The characteristic strength, Q_d, can be accurately estimated as being equal to the yield force of the lead plug. The yield stress of lead is about 1,500 psi. The effective stiffness of the lead-plug bearing, K_{eff}, at a horizontal displacement D larger than the yield displacement D_y, may be defined in terms of the post-elastic stiffness, K_d, and characteristic strength, Q_d, as

$$K_{eff} = K_d + \frac{Q_d}{D} \qquad D \geq D_y \tag{14-23}$$

The natural period is given as

$$T = 2\pi\sqrt{\frac{W}{K_{eff}\,g}} \tag{14-24}$$

As a rule of thumb for lead-rubber isolators K_u is taken as $10K_d$. Kelly[14-46] has shown that with this assumption, the effective percentage of critical damping provided by the isolator, β_{eff}, can be obtained from

$$\beta_{eff} = \frac{4Q_d\left(D - Q_d/9K_u\right)}{2\pi\left(K_uD + Q_d\right)D} \tag{14-25}$$

14.9.3 Friction Pendulum System

If the load on an FPS isolator is W, and the radius of curvature of the FPS dish is R, then the horizontal stiffness of the isolator may be defined for design purposes as

$$K_H = \frac{W}{R} \tag{14-26}$$

The natural period of and FPS isolated system is only a function of R

$$T = 2\pi\sqrt{\frac{R}{g}} \tag{14-27}$$

The effective (peak-to-peak) stiffness of the isolator is given by

$$K_{eff} = \frac{W}{R} + \frac{\mu W}{D} \tag{14-27}$$

where μ is the friction coefficient and all other terms are defined previously. The friction coefficient has been shown to be independent of velocity for pressures of 20 ksi or more on the articulated slider[14-8]. The damping provided by the system, β, is a function of horizontal displacement and may be obtained from

$$\beta = \frac{2}{\pi}\frac{\mu}{\mu + D/R} \tag{14-28}$$

An estimate of the rise of the structure (vertical displacement) as a result of movement along the curved surface of the isolator may be obtained from

$$\delta_V \cong \frac{1}{2}\frac{D^2}{R} \tag{14-29}$$

14.9.4 Design Example

Assume you are in charge of designing a four story isolated building. The owner, a public entity, requires that the design accommodate competing isolation systems to bid on the job. The architect needs to know the maximum dimensions of the isolators so that she can complete her schematic design. Your engineering team needs to know the design base shears for proportioning the structural system above and the elements below the isolation surface. You would like to estimate these values for three alternative isolation systems:

a) a high damping rubber system
b) a lead-rubber system which may or may not be complimented by ordinary low-damping isolators, and
c) a friction pendulum system.

The following information is also available to you at this time.

- The structural system above the isolation plane is a shear wall system with $R = 6$.
- The total weight of the building is 14,120 kips.
- There are a total of 60 support points (i.e., 60 isolators).
- The average sustained load on an interior isolator is 500 kips.
- The fixed-base period of the super-structure is estimated to be about 0.70 seconds.
- From IBC-2000 for this site, S_{D1}=0.56

Estimate the size of isolators needed for each of the three alternatives and the corresponding seismic design base shears so that the architect and engineers could make substantial progress while you are performing your final design of the isolators and preparing for procurement and prototype testing process.

SOLUTION

$$T_D \geq 3T_{fixed-base} = 3(0.7) = 2.1\,\text{sec.}$$

T be on the safe side, take TD=2.5 sec for preliminary design. The reduction fact, RI for the superstructure is calculated from Eq. 14-14 as

$$1.0 \leq R_I = \frac{3}{8}(6) = 2.25 \leq 2.0 \Rightarrow R_I = 2.0$$

a) High-Damping Rubber Isolators

To be conservative we size the isolator under largest sustained load. That is an interior isolator under 500 kips of load. We take damping to be 10% subject to verification. Therefore, from Eq. 14-17 or from Table 1623.2.2.1 of IBC-2000, B_D=1.20.

We take a typical high damping rubber compound with G=145 psi and K=300 ksi. Therefore, our first estimate for the horizontal stiffness of the isolator is obtained from Eq. 14-8 as

$$K_H = \frac{W}{g}\left(\frac{2\pi}{T}\right)^2 = \frac{500}{386}\left(\frac{2\pi}{2.5}\right)^2 = 7.35\,\text{k/in.}$$

The design displacement is obtained from Eq. 14-1

$$D_D = \left(\frac{g}{4\pi^2}\right)\frac{(0.56)(2.5)}{1.20} = 11.43\,\text{in.}$$

Usually we want to achieve this displacement at about 150% shear strain. From Eq. 14-19 , we can estimate the total rubber thickness required

$$\gamma = \frac{D}{t_r} \Rightarrow t_r = \frac{11.43}{1.50} = 7.6\,\text{in.}$$

Now we calculate the cross-sectional area and the required diameter of the bearing from Eq. 14-18

$$A = \frac{K_H t_r}{G} = \frac{7.33(7.6)}{0.145} = 384\,\text{in}^2$$

$$\Phi = \sqrt{\frac{4\text{A}}{\pi}} = \sqrt{\frac{4(384)}{\pi}} = 22.12\,\text{in}$$

Use $\Phi = 24\,\text{in.}$

Now we re-calculate A, K_H and T_D based on this bearing diameter:

$$A = \frac{\pi\Phi^2}{4} = \frac{\pi(24)^2}{4} = 452\,\text{in}^2$$

$$K_H = 7.35(452/384) = 8.65\,\text{k/in}$$

$$T_D = 2.50\sqrt{(7.33/8.65)} = 2.3\,\text{sec} \succ 2.1\,\text{sec}$$

Selecting a shape factor of S=10, from Eq. 14-17 we can calculate the thickness of individual rubber layers, t

$$t = \frac{\Phi}{4S} = \frac{24}{4(10)} = 0.6\,\text{in, say } 5/8''$$

$$\text{number of layers} = \frac{7.6}{5/8} = 12.1, \text{say } 12$$

$$t_r = 12(5/8) = 7.5\,\text{in}$$

Using 0.1in thick steel shim plates and one inch top and bottom end plates, the total height of the bearing is

$$h = 7.5 + 2(1.0) + 11(0.1) = 10.6\,\text{in}$$

Let us now estimate the base shear coefficient for design of the superstructure, C_s, and the corresponding value for the base, C_b.

$$C_b = \frac{V_b}{W} \cong \frac{K_H D}{W} = \frac{8.65(11.43)}{500} = 0.20$$

$$C_s = \frac{C_b}{R_I} \cong 0.10$$

b) Lead-Rubber Isolators

It is usually more beneficial to begin designing isolation systems using LRB isolators as a system and then assign individual isolator properties. The reason is that often the best solution is a combination of LRB isolators and low damping rubber isolators (i.e., isolators without the lead plug).

In LRB isolators since damping comes from the lead core, usually there is no need to use high damping rubber and therefore ordinary rubber is generally used. Given the solution in Part (a) of this problem, it is obvious that we do not need a large amount of damping here. Therefore, we use 15% critical damping subject to verification and a rubber compound with a shear modulus of G=60 psi.

The same target period of 2.5 seconds is maintained. Either from Eq. 14-17 or from Table 1623.2.2.1 of IBC-2000, for β=15%, B_D=1.35 and from Eq. 14-1

$$D_D = \left(\frac{g}{4\pi^2}\right)\frac{(0.56)(2.5)}{1.35} = 10.16\,\text{in.}$$

Treating the entire isolation system as a unit, the required stiffness corresponding to this period is

$$K_H = \frac{W}{g}\left(\frac{2\pi}{T}\right)^2 = \frac{14{,}120}{386}\left(\frac{2\pi}{2.5}\right)^2 = 231\,\text{k/in.}$$

The energy dissipated per cycle is

$$W_D = 2\pi K_{eff} D^2 \beta_{eff} = 2\pi(231)(10.16)^2(0.15)$$
$$= 22{,}462 \text{ k - in}$$

The area of the hysteresis loop, however, is also given by

$$W_D = 4Q_d(D - D_y)$$

and if ignore D_y because of its relatively small size

$$Q_d \cong \frac{W_D}{4D} = \frac{22{,}462}{4(10.16)} = 552 \text{ kips}$$

Now, we can estimate K_d from Eq. 14-23:

$$K_d = K_{eff} - \frac{Q_d}{D} = 231 - \frac{552}{10.16}$$
$$= 176 \text{ kips/in}$$

and since

$$D_y = \frac{Q_d}{K_u - K_d} \text{ and } K_u \approx 10K_d \text{ , then}$$
$$D_y \cong \frac{Q_d}{9K_d} = \frac{552}{9(176)} = 0.35 \text{ in.}$$

The total cross sectional area of the lead plug area needed for the entire isolation system is

$$A_{pb}^{total} = \frac{Q_d}{F_y^{pb}} = \frac{552}{1.5} = 368 \text{ in}^2$$

For the sake of simplicity, we keep the diameter of all isolators the same at Φ=24 in. Using 3.5 inch diameter lead cores in 40 of the 60 isolators provides a lead cross sectional area of slightly more than 385 square inches. Now we have to recalculate Q_d based on this new area of lead

$$Q_d = 385(1.5) = 578 \text{ kips}$$

The stiffness provided by lead plugs is

$$K_{pb} = \frac{Q_d}{D} = \frac{578}{10.16} = 57 \text{ k - in}$$

and the remainder of required stiffness has to be provided by rubber. Therefore,

$$K_{rubber} = K_H - \frac{Q_d}{D} = 231 - \frac{552}{10.16} = 176 \text{ k - in}$$

The total cross sectional area of the rubber is

$$A_{rubber} = 60\frac{\pi(24)^2}{4} - 385 = 26{,}744 \text{ in}^2$$

and from Eq. 14-18, we can now establish the required total rubber thickness, t_r, as

$$t_r = \frac{GA}{K_{rubber}} = \frac{(60\times10^{-3})(26{,}744)}{176}$$
$$= 9.1 \text{ in}$$

Therefore, assuming 1.0 inch thick top and bottom end plates and steel shims, our isolators will have a height of less than 12 inches.

The seismic shear coefficients are calculated as in Part (a):

$$C_b = \frac{231(10.16)}{14{,}120} = 0.167$$
$$C_s = \frac{0.17}{2} = 0.083$$

c) Friction Pendulum System

Using the same target period of 2.5 seconds, from Eq. 14-27

$$2.5 = 2\pi\sqrt{\frac{R}{386}} \Rightarrow R = 61.23 \text{ in}$$

Eq. 14-28 indicates that effective damping and maximum displacement are inter-related. For example, assuming a coefficient of friction

of μ=0.06 and a design displacement of D=12 inches, we get

$$\beta_{eff} = \frac{2}{\pi}\frac{0.06}{0.06+12.0/61.23} = 15\%$$

The selected value of D=12 inches satisfies the minimum code prescribed displacement of 10.16 inches which was calculated for the same basic parameters (T=2.5 sec., β=15%, B=1.35) in Part (b).

From Eq. 14-27 the effective total stiffness of the FPS isolation system consisting of 60 identical isolators will be

$$K_{eff} = \frac{14{,}120}{61.23} + \frac{0.06(14{,}120)}{12.0} = 301\,\text{k/in}$$

and the seismic base shear coefficients are calculated as before:

$$C_b = \frac{K_{eff}D}{W} = \frac{301(12.0)}{14{,}120} = 0.25$$

$$C_s = \frac{C_b}{R_I} = \frac{0.25}{2} = 0.125$$

14.10 CONCLUSIONS

Several practical systems of seismic isolation have been developed and implemented in recent years, and interest in the application of this technique continues to grow. Although seismic isolation offers significant benefits, it is by no means a panacea. Feasibility studies are required early in the design phase of a project to evaluate both the technical and the economic issues. If its inclusion is appropriate from a technical and first-cost perspective, then significant life-cycle cost advantages can be achieved. Thus, seismic isolation represents an important step forward in the continuity search for improved seismic safety.

The construction costs of incorporating seismic isolation in new buildings in the United States indicates that it depends on two primary variables: the design force level of the conventional building and the location of the plane of isolation. The theory of seismic isolation permits substantial cost savings for isolated buildings compared to convention construction. However, given the current code regulations, the initial cost for seismic isolated structures can be equal to or exceed the cost for a similarly situated fixed base building by as much as 5%. However, one should keep in mind that this is a very minor price to pay for achieving a structures which will have a substantially better seismic performance during major earthquakes. Simply stated, achieving the level of performance provided by seismic isolation is virtually impossible through conventional construction.

For the retrofit of existing buildings, seismic isolation may only be technically applicable in one out of approximately eight buildings. When it is technically feasible it has the attractive feature that most of the construction work is confined to the basement area. Retrofit construction costs, when compared to a conventional code force level upgrade, have been shown to be comparable. In addition, disruption to the operation of the facility may be avoided during construction with the use of seismic isolation.

One of the major difficulties in comparing the costs and benefits of a conventional and an isolated structure is the significant difference in their performance characteristics. In the only such design performed to date, a critical Fire Command and Control Facility for Los Angeles County required both a conventional and an isolated two story structure to meet the same stringent performance criteria. In this case the isolated design was shown to be 6% less expensive.

If equivalent performance designs are not performed then the costs and benefits of different structural design schemes can only be assessed by calculating and comparing the four principal cost impact factors: 1) construction cost: 2) earthquake insurance premium: 3) physical damage that must be repaired and 4)

disruption costs, loss of market share and potential liability to occupants for their losses. Earthquake damage studies have shown that seismic isolation can reduce the cost of earthquake damage factors of 4 to 7. Furthermore, the estimated dollar value of earthquake damage in an isolated building has been shown to be less than the currently available 10% earthquake insurance deductible.

REFERENCES

14-1 Calantariants, J. A., "improvements in and Connected with Building and Other Works and Appurtenances to Resist the Action of Earthquakes and the Like," Paper No. 325371, Engineering Library, Stanford University, CA, 1909.

14-2 deMontalk, Robert Wladislas, Shock Absorbing or Minimizing Means for Buildings," U.S. Patent No. 1,847,820, 1932.

14-3 Bechtold, Jacob, "Earthquake-Proof Building," US Patent No. 845,046, 1907.

14-4 Wright, F.L., An Autobiography: Frank Lloyd Wright, Horizon Press, New York, 1977.

14-5 Green, N.B., "Flexible First Story Construction for Earthquake Resistance, "Trans. Amer. Soc. Civil Eng. 100, 645, 1935.

14-6 Kelly, J.M. "Aseismic Base Isolation: Its History and Prospects," Joint Sealing and Bearing Systems for Concrete Structures, Publication SP-70, American Concrete Institute, 1982.

14-7 Buckle, I.G. and Mayes, R.L., "Seismic Isolation: History, Application and Performance - A World View, "Earthquake Spectra Journal, Theme Issue: Seismic Isolation, EERI, Vol. 6, No. 2, May 1990; and Buckle, I.G., "Development and Application of Base Isolation and Passive Energy Dissipation: A World Overview," Applied Technology Council Report 17, Palo Alto, CA, Mar. 1986.

14-8 Naeim, F. and Kelly, J.M., *Design of Seismic Isolated Structures: From Theory to Practice*, John Wiley and Sons, Inc., New York, 1999.

14-9 Skinner, R.E., Tyler, R.G., Heine, A.J., and Robinson, W.J., "Hysteretic Dampers for the Protection of Structures from Earthquakes," Bull. New Zealand Nat. Soc. Earthquake Eng. 13, No.1, Mar. 1980.

14-10 Way, D. and Lew, M., "Design and Analysis of a High Damping Rubber Isolation System," Applied Technology Council Report No. 17, Palo Alto, CA, 1986.

14-11 Jolivet, F. and Richli, M., "Aseismic Foundation System for Nuclear Power Stations," Transactions of the Fourth Conference on Structural Mechanics in Reactor Teachnology, San Francisco, Vol. K, No. 9/2, 1977

14-12 Castiglinoni, A., Urbano, C., and Stupazzini, B., "Seismic Design of Bridges in High Activity Region," Proceedings of the Seventh European Conference on Earthquake Engineering, Athens, Vol. 6, 186-203, 1982.

14-13 Ikonomou, A.S., "Seismic Isolation of Bridges with the Alexisismon," Proceedings of the Conference on Short an Medium Span Bridges, Toronto, 141-153, 1982.

14-14 Robinson, W.H., "Lead-Rubber Hysteretic Bearings Suitable for Protecting Structures During Earthquakes," J. Earthquake Eng. And Structural Dynamics 10, 593-604, 1982.

14-15 Blakeley, R. W. G., et al., "Recommendations for the Design and Construction of Base Isolated Structures," Bull. New Zealand Nat. Soc. Earthquake Eng. 12, No. 2, 1979.

14-16 Kelly, J. M. and Tsztoo, D., "Earthquake Simulation Testing of a Stepping Fram with Energy-Absorbing Devices," Report No. UCB/EERC-77/17, Earthquake Engineering Research Center, Univ. of California, Berkeley, 1977.

14-17 "Earthquake Simulator Tests of a Nine-Story Steel Frame with Columns Allowed to Uplift," report No. UCB/EERC-77/23, Earthquake Engineering Research Center, Univ. of California, Berkeley, 1977.

14-18 Kelly, J. M., Eidinger, J. M., and Derham, C. J., "A Practical Soft Story System," Report No. UCB/EERC-77/27, Earthquake Engineering Research Center, Univ. of California, Berkeley, 1977.

14-19 Kelly, J. M., Beucke, K. E., and Skinner, M. S., "Experimental Testing of a Friction Damped Aseismic Base Isolation System with Fail-Safe Characeristics," Report No. UCB/EERC-80/18, Earthquake Engineerig Research Center, Univ. of California, Berkeley, 1980.

14-20 Kelly, J. M., Beucke, K. E., and Skinner, M. S., "Experimental Testing of an Energy-Absorbing Base Isolation System," Report No. UCB/EERC-80/35, Earthquake Engineering Research Center, University of California, Berkeley, 1980.

14-21 Kelly, J. M., and Hodder, S. B., "Experimental Study of Lead and Elastomeric Dampers for Base Isolation Systems," Report No. UCB/EERC-81/16, Earthquake Engineering Research Center, Univ. of California, Berkeley, 1981.

14-22 Kelly, J. M., Buckle, I. G., and Tsai, H. C., "Earthquake Simulator Testing of a Base Isolated Bridge Deck," Report No. UCB/EERC-85/09, Earthquake Engineering Research Center, Univ. of California, Berkeley, 1985.

14-23 Structural Engineers Association of California, Recommended Lateral Force Requirements and Commentary, San Francisco, 1983.

14-24 Stanton, J. F. and Roeder, C. W., "Elastomeric Bearings: Design, Construction and Materials," NCHRP Report 248, Transportation Research Board, Washington, 1982.

14-25 Applied Technology Council, "Proceedings of a Seminar and Workshop on Base Isolation and Passive Energy Dissipation," ATC Report No. 17, Palo Alto, CA, 1986.

14-26 Structural Engineers Association of Northern California (1986), *Tentative Seismic Isolation Design Requirements*, San Francisco, 1986.

14-27 Structural Engineers Association of Northern California, Tentative Lateral Force Requirements, San Francisco, 1985.

14-28 International Conference of Building Officials, *Uniform Building Code,* Whittier, CA 1994.

14-29 Kelly, T. E., Mayes, R. L., and Jones, L. R., "Preliminary Design Procedures for Seismically Isolated Structures," Proceedings of a Seminar on Base Isolation and Passive Energy Dissipation, Report No. 17, Applied Technology Council, Palo Alto, CA, 1986.

14-30 Buckle, I.G. and mayes, R.L. (1990), "The Application of Seismic Isolation to Bridges," Proceedings ASCE Structures Congress: Seismic Engineering - Research and Practice, pp 633-642, May, 1990.

14-31 Chalhoub, M.S., and Kelly, J.M., (1989) "Earthquake Simulator Evaluation of a Combined Sliding Bearing and Tension Controlled Rubber Bearing Isolation System." Proceeding, 1989 ASME Pressure Vessels and Piping Conference, American Society of Mechanical Engineers, Hawaii, Vol. 181, pp 59-64.

14-32 Constantinou, M.C., Mokha, A., and Reinhorn, A.M., (1990) "Teflon Bearings in Base Isolation II: Modeling, "Journal of Structural Engineering, ASCE, Vol. 116, No. 2 pp. 455-474.

14-33 Griffith, M.C., Aiken, T.D., and Kelly, J.M. (1988) "Experimental Evaluation of Seismic Isolation of a Nine-Story Braced Steel Frame Subject to Uplift." Report No. UCB/EERC-88/05, Earthquake Engineering Research Center, University of California, Berkeley.

14-34 Kelly, J.M.., Eidenger, J.M. and Derham, C.J. (1977) "A Practical Soft Story System," Report No. UCB/EERC-77/27, Earthquake Engineering Research Center, University of California, Berkeley.

14-35 Kelly, J.M., Beucke, K.E. and Skinner, M.S. (1980), "Experimental Testing of an Energy-Absorbing Base Isolation System," Report No. UCB/EERC-80/35, Earthquake Engineering Research Center, University of California, Berkley.

14-36 Kelly, J.M. and Hodder, S.B. (1981), "Experimental Study of Elastomeric Dampers for Base Isolation Systems," Report No. UCB.EERC-81/16, Earthquake Engineering Research Center, University of California, Berkeley.

14-37 Kell, J.M., Buckle, I.G. and Tsai, H.C. (1985), "Earthquake Simulator Testing of Base Isolated Bridge Deck," Report Bo UCB/EERC-85/09, Earthquake Engineering Research Center, University of California, Berkley.

14-38 Mokha, A., Constantinou, M.C., and Reinhorn, A.M., (1990), "Teflon Bearings in Base Isolation I: Testing, "Journal of Structural Engineering, ASCE, Vol. 116, No. 2, pp. 438-454.

14-39 Mohka, A., Constantinou, M.C., and Reinhorn, A.M., (1990), "Teflon Bearings in a Seismic Base Isolation. Experimental Studies and mathematical Modeling." Report No. NCEER-88-0038, National Center for Earthquake Engineering Research, State University of New York, Buffalo.

14-40 Zayas, V., Low, S.S., and Mahin, S.A., (1987) "The FPS Earthquake resisting System, Experimental Report." Report No. UCB/EERC-87/01, Earth Engineering Research Center, University of California, Berkeley.

14-41 Applied Technology Council, "proceedings of a Workshop on Seismic Isolation, Passive Energy

14-42 International Code Council (2000), *International Building Code*, March.

14-43 International Conference of Building Officials, *Uniform Building Code,* Whittier, CA 1997.

14-44 Federal Emergency Management Agency (1997), *NEHRP Guidelines for the Seismic Rehabilitation of Buildings*, FEMA-273, Washington, D.C., October.

14-45 Federal Emergency Management Agency (1997), *NEHRP Commentary on the Guidelines for the Seismic Rehabilitation of Buildings*, FEMA-274, Washington, D.C., October.

14-46 Kelly, J.M. (1996), *Earthquake-Resistant Design with Rubber*, 2nd Edition, Springer-Verlag, London.